US008483018B2

(12) **United States Patent**
Anderson et al.

(10) **Patent No.: US 8,483,018 B2**
(45) **Date of Patent: Jul. 9, 2013**

(54) **BRAILLE WATCH**

(76) Inventors: **Nicholas Leon Anderson**, Eau Claire, WI (US); **John P Puccinelli**, Cottage Grove, WI (US); **Chandresh Singh**, Brookfield, WI (US); **Kyle St. John Jamar**, Hibbing, MN (US); **Taylor Ann Milne**, Mundelein, IL (US)

(*) Notice: Subject to any disclaimer, the term of this patent is extended or adjusted under 35 U.S.C. 154(b) by 18 days.

(21) Appl. No.: **13/314,835**

(22) Filed: **Dec. 8, 2011**

(65) **Prior Publication Data**

US 2013/0149674 A1 Jun. 13, 2013

(51) **Int. Cl.**
G04B 19/06 (2006.01)

(52) **U.S. Cl.**
USPC **368/230**

(58) **Field of Classification Search**
USPC 368/230, 76–77, 223; 968/245
See application file for complete search history.

(56) **References Cited**

U.S. PATENT DOCUMENTS

2,091,146 A * 8/1937 Hamilton 368/230
2,915,874 A * 12/1959 Ferguson, Jr. 368/230
7,079,454 B2 * 7/2006 Wellen 368/230

OTHER PUBLICATIONS

Anderson et al., Digital Braille Watch, Dec. 7, 2010, University of Wisconsin—Madison: Biomedical Engineering.
Jamar et al., Digital Braille Watch, May 4, 2011, University of Wisconsin Madison: Department of Biomedical Engineering.

* cited by examiner

Primary Examiner — Edwin A. Leon
(74) *Attorney, Agent, or Firm* — Bell & Manning, LLC

(57) **ABSTRACT**

A Braille watch is provided that includes a first disk including a first raised surface, a first pin, a second pin, a third pin, and a fourth pin, a top plate, and an actuator to rotate the first disk. The top plate includes a first hole, a second hole, a third hole, and a fourth hole, wherein the first pin is mounted to slide within the first hole, the second pin is mounted to slide within the second hole, the third pin is mounted to slide within the third hole, and the fourth pin is mounted to slide within the fourth hole. The first pin, the second pin, the third pin, and the fourth pin are mounted above the first disk to extend above a top surface of the top plate when the first raised surface is positioned below the respective pin.

20 Claims, 63 Drawing Sheets

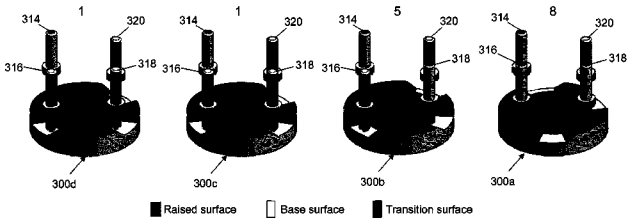

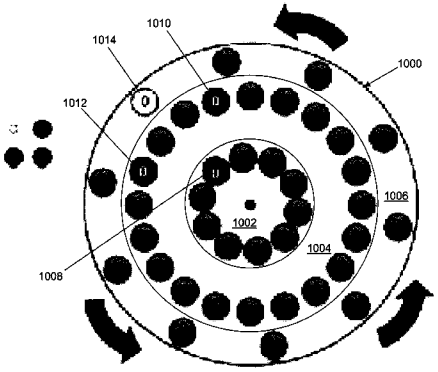

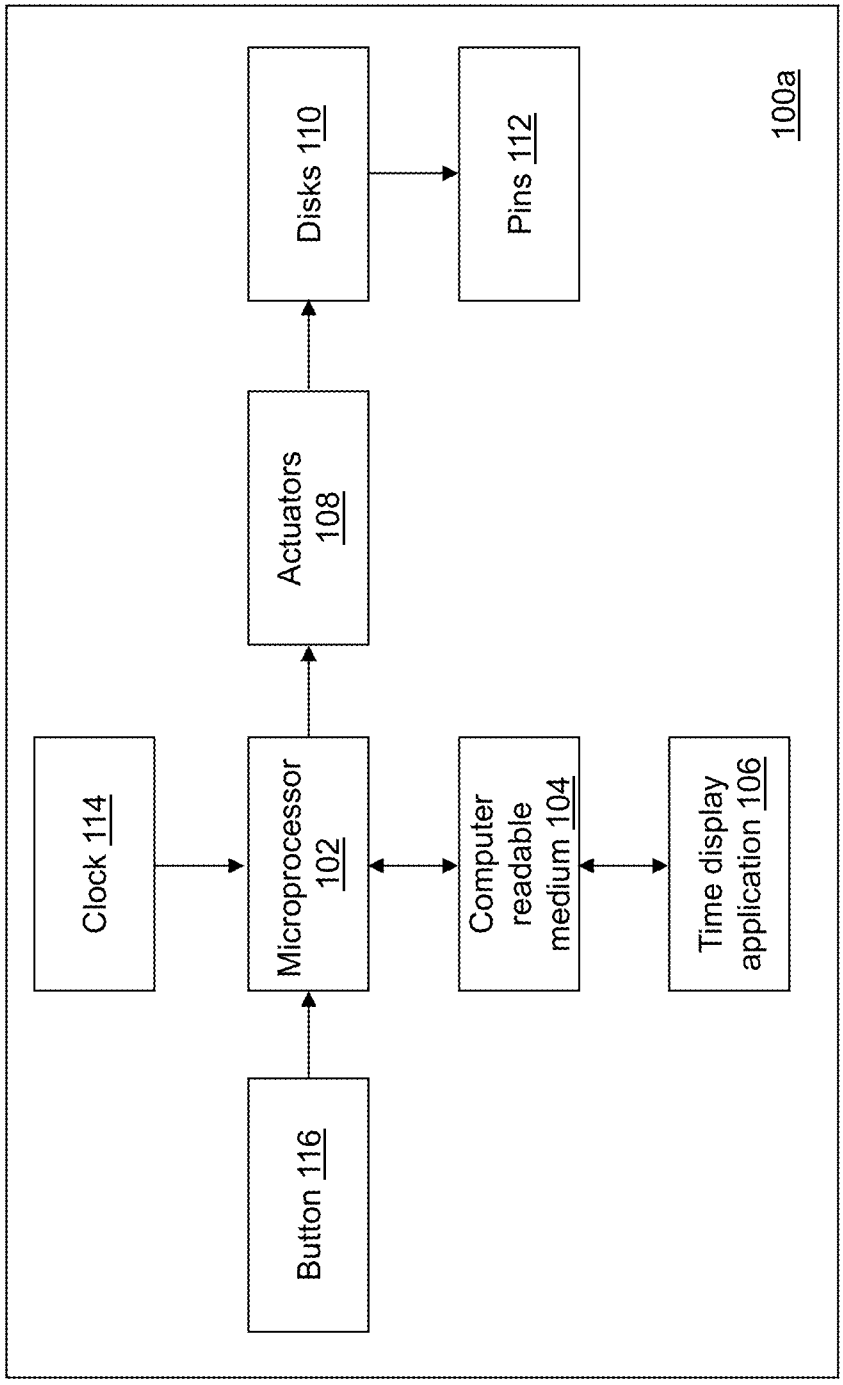
100a
Disks 110
Pins 112
Actuators 108
Clock 114
Microprocessor 102
Computer readable medium 104
Time display application 106
Button 116

Fig. 1

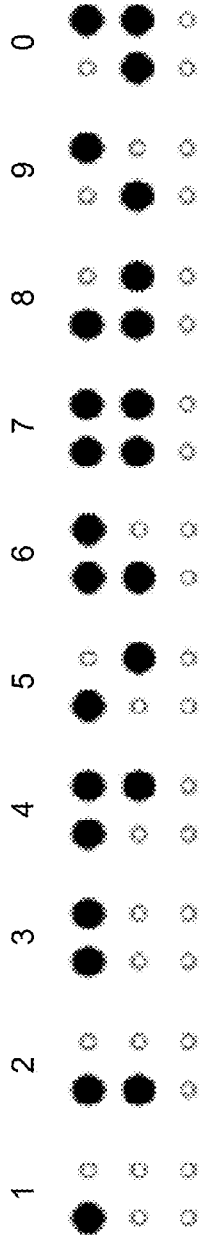

Fig. 2

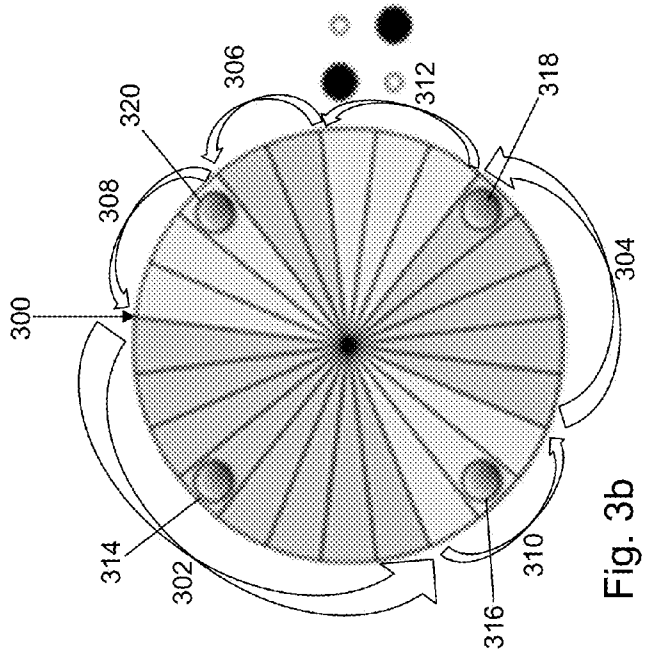

Fig. 3b

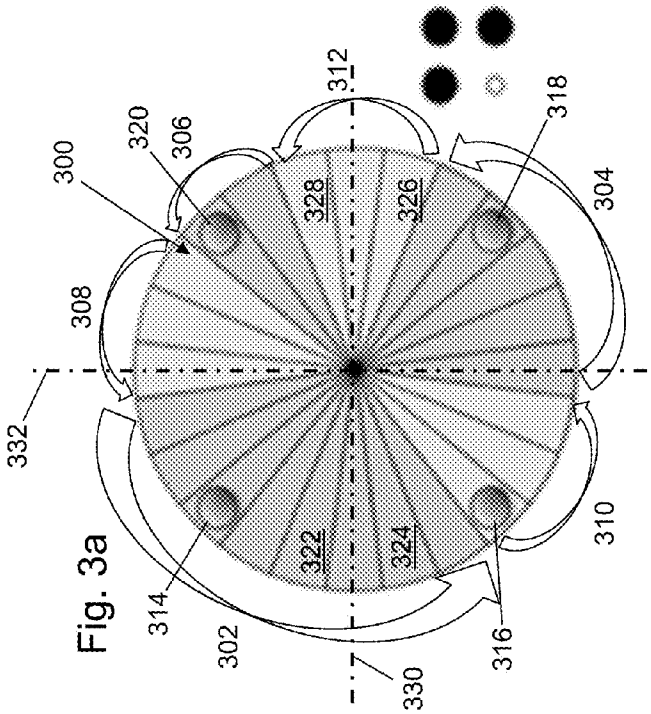

Fig. 3a

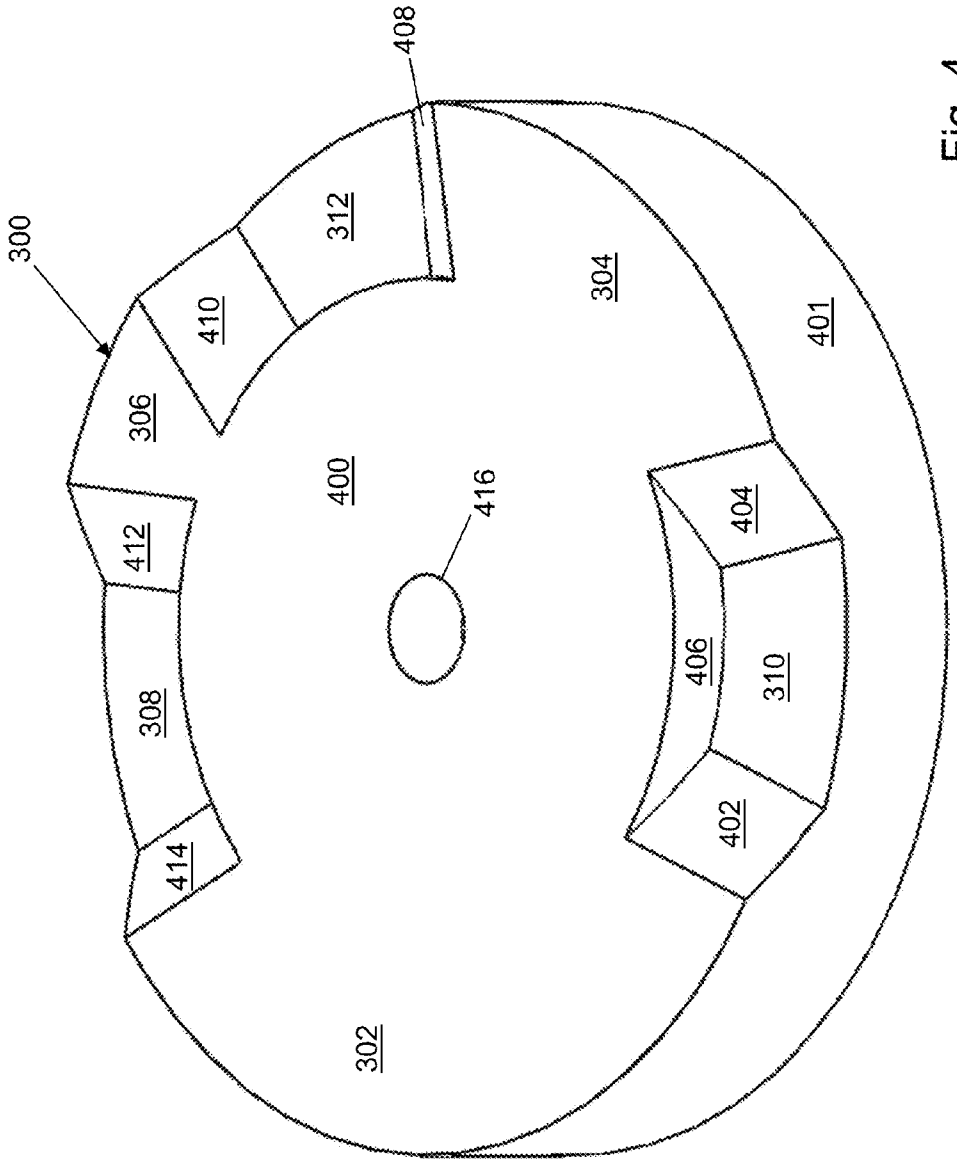
300
302
304
306
308
310
312
400
401
402
404
406
408
410
412
414
416

Fig. 4

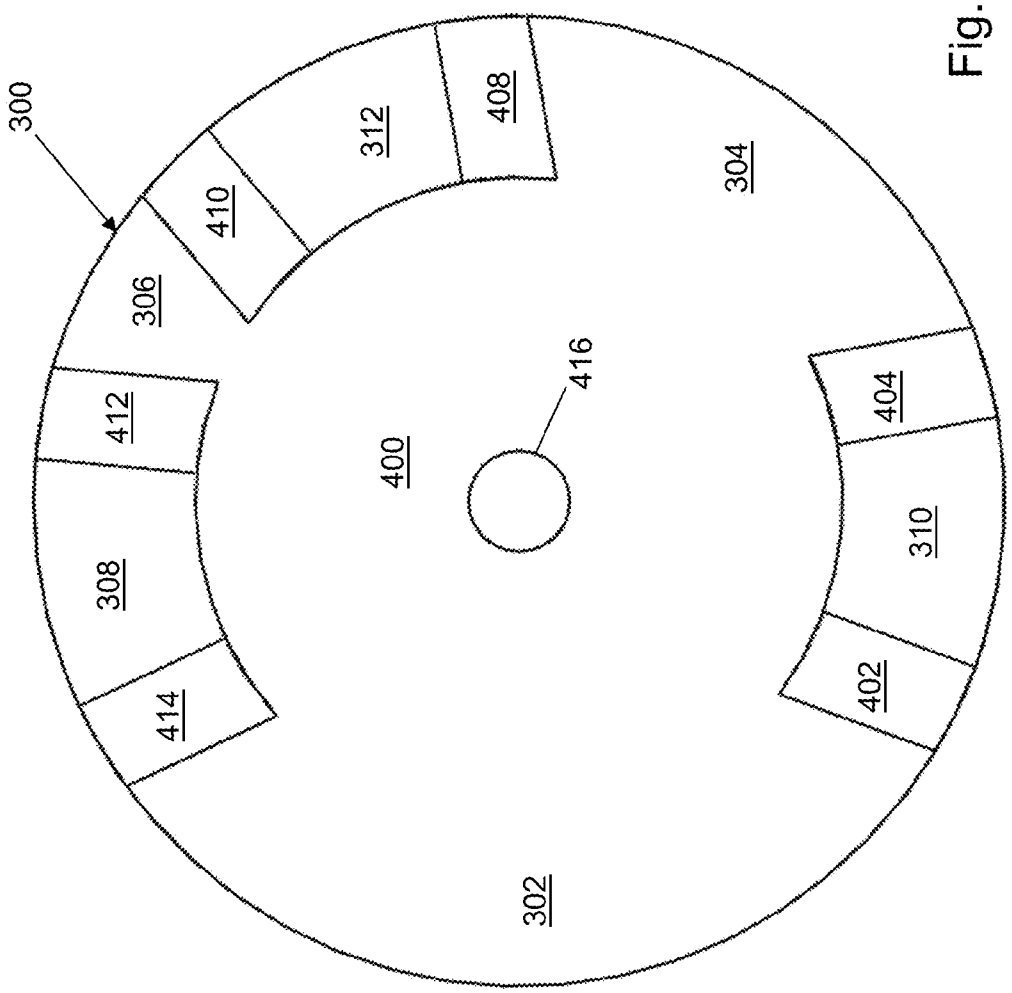

Fig. 5

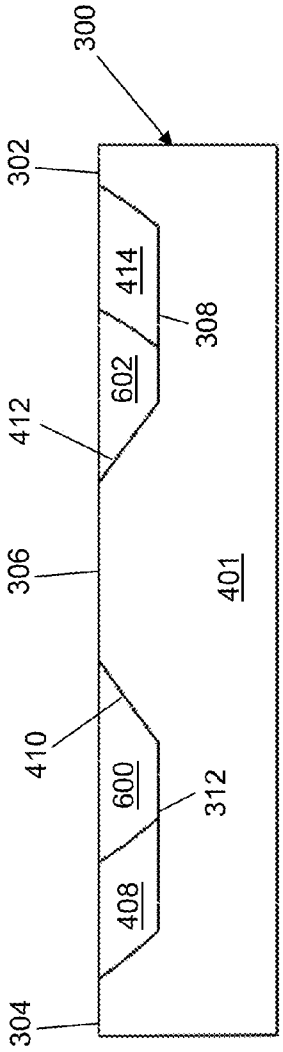
300
302
414
308
602
412
306
401
410
600
312
408
304

Fig. 6

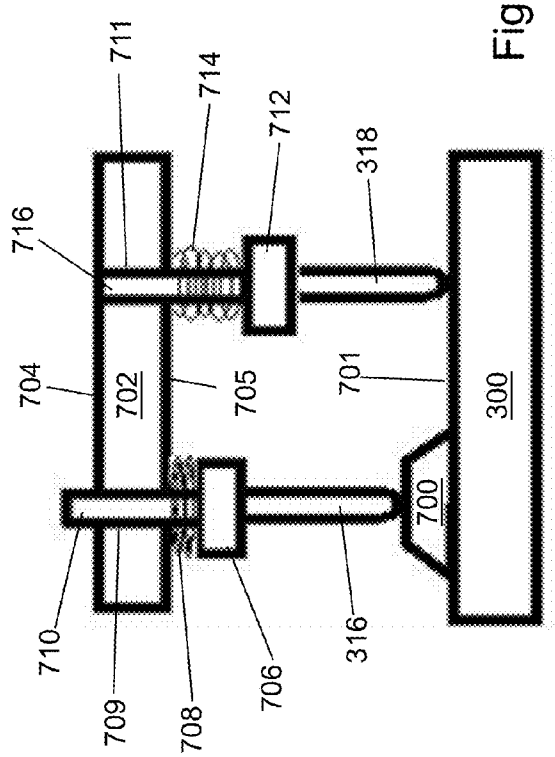
711
714
712
318
716
704
702
705
701
300
700
710
709
708
706
316

Fig. 7

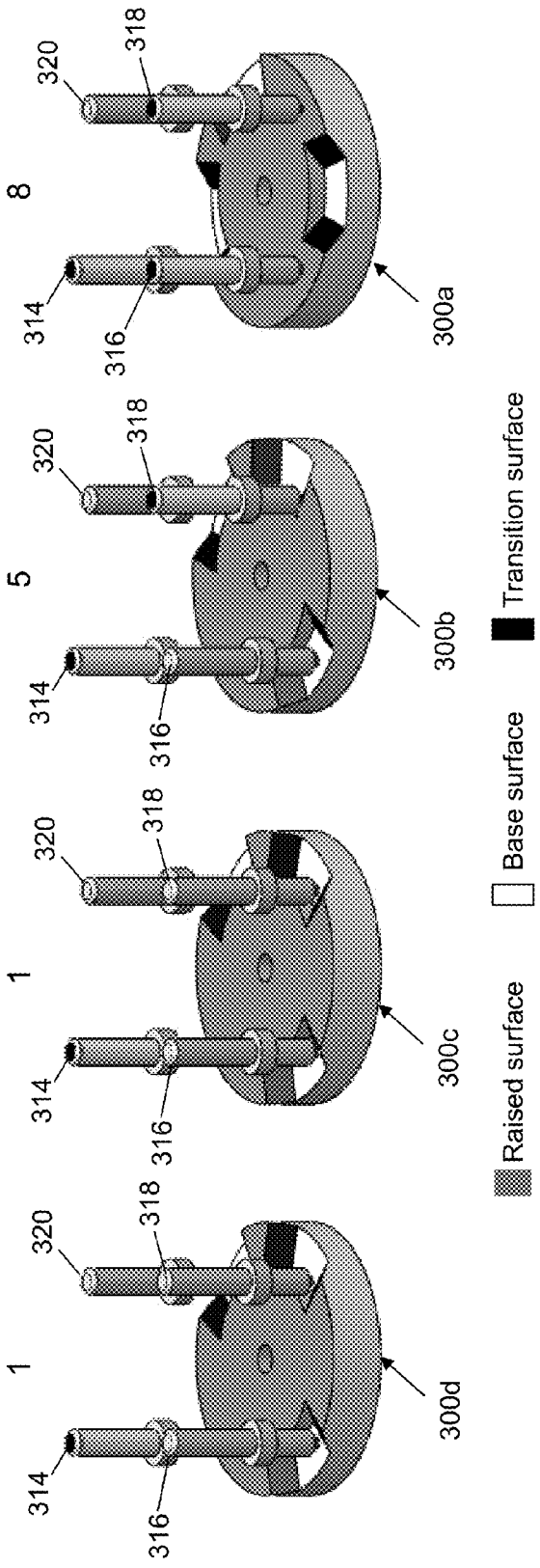
8
5
1
1
320
318
314
316
300a
300b
300c
300d
Transition surface
Base surface
Raised surface

Fig. 8a

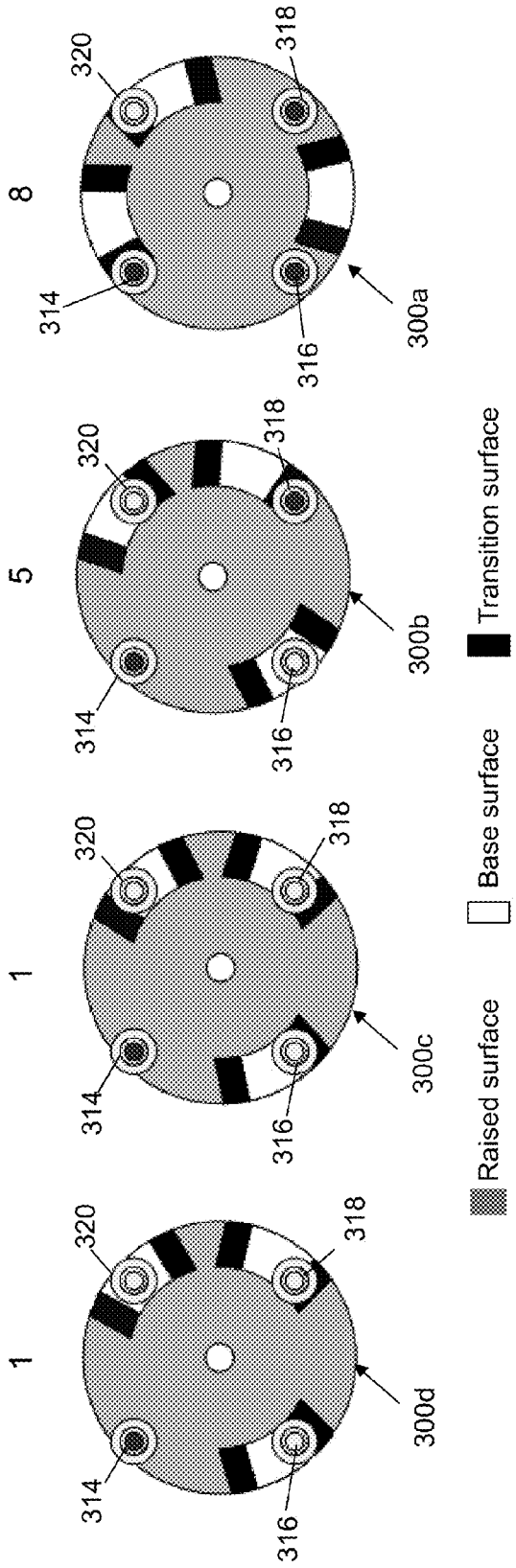
8
5
1
1
320
318
314
316
300a
300b
300c
300d
Raised surface
Base surface
Transition surface

Fig. 8b

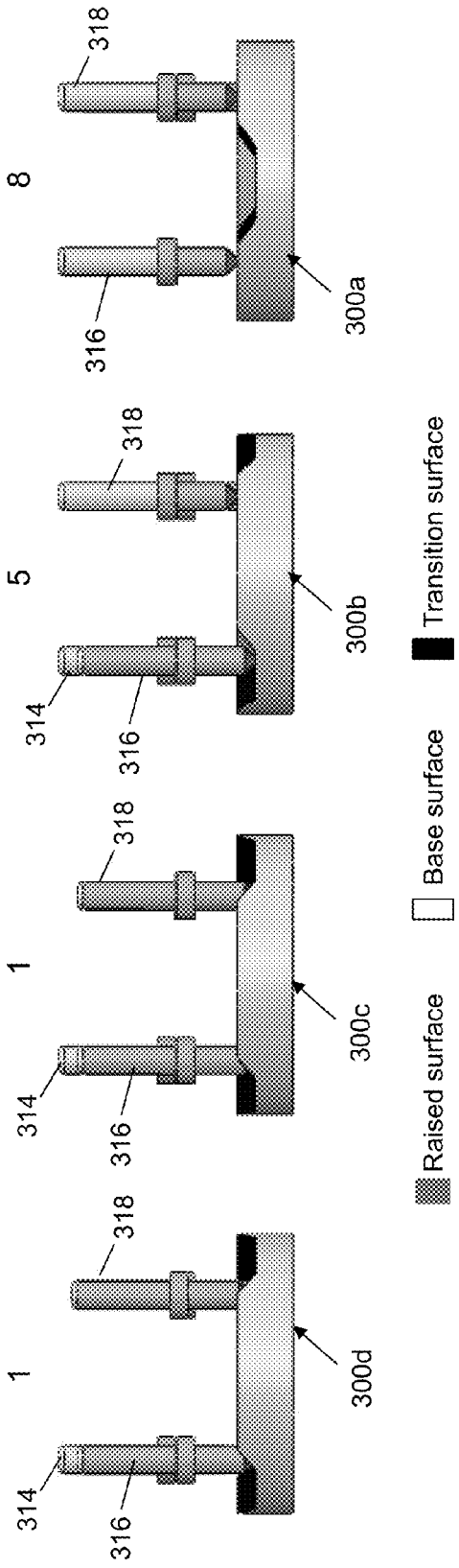
8
5
1
1
318
316
314
300a
300b
300c
300d
Transition surface
Base surface
Raised surface

Fig. 8c

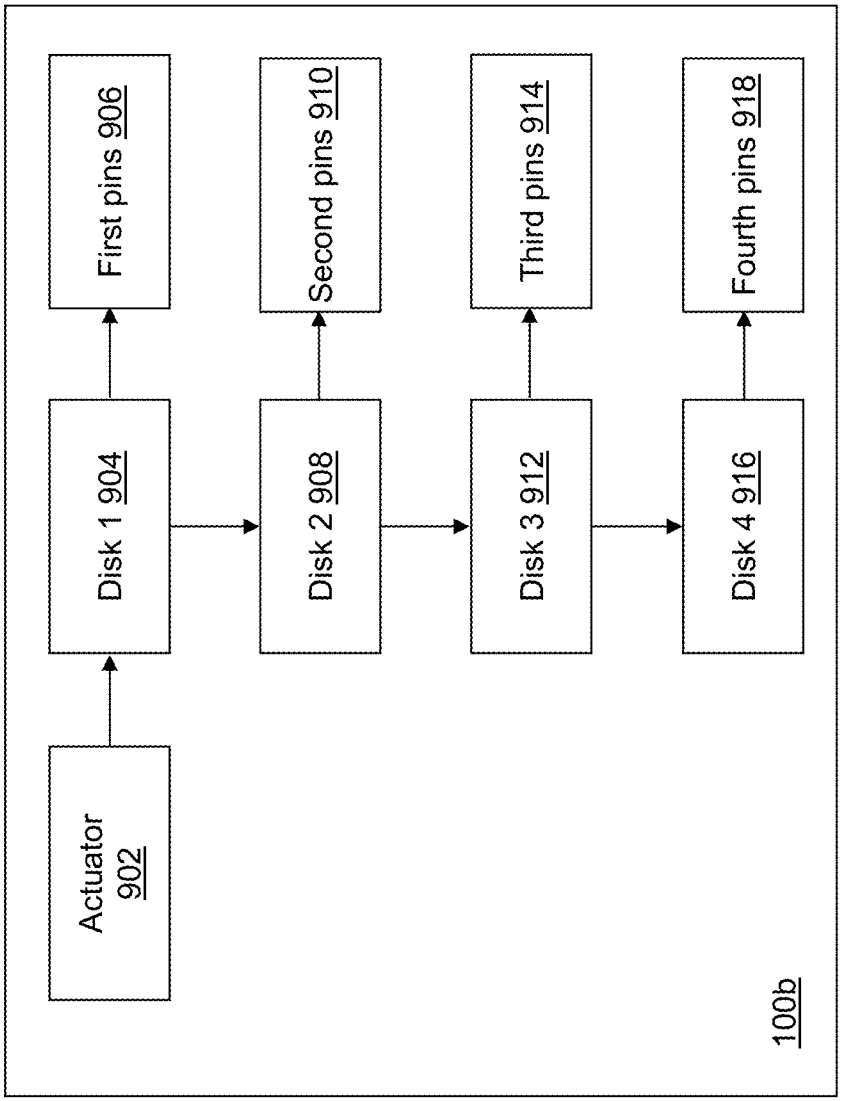
Actuator 902
Disk 1 904
Disk 2 908
Disk 3 912
Disk 4 916
First pins 906
Second pins 910
Third pins 914
Fourth pins 918
100b

Fig. 9

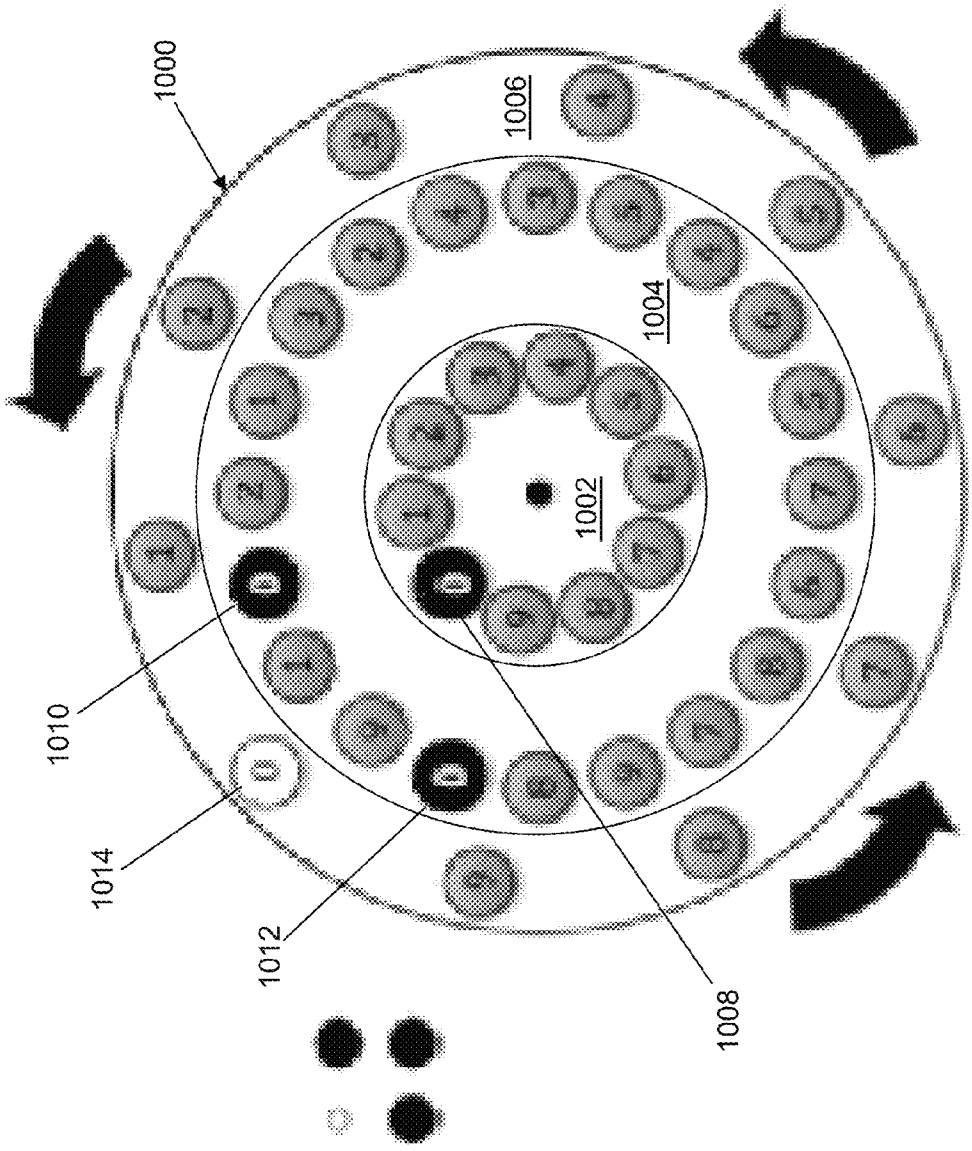

Fig. 10

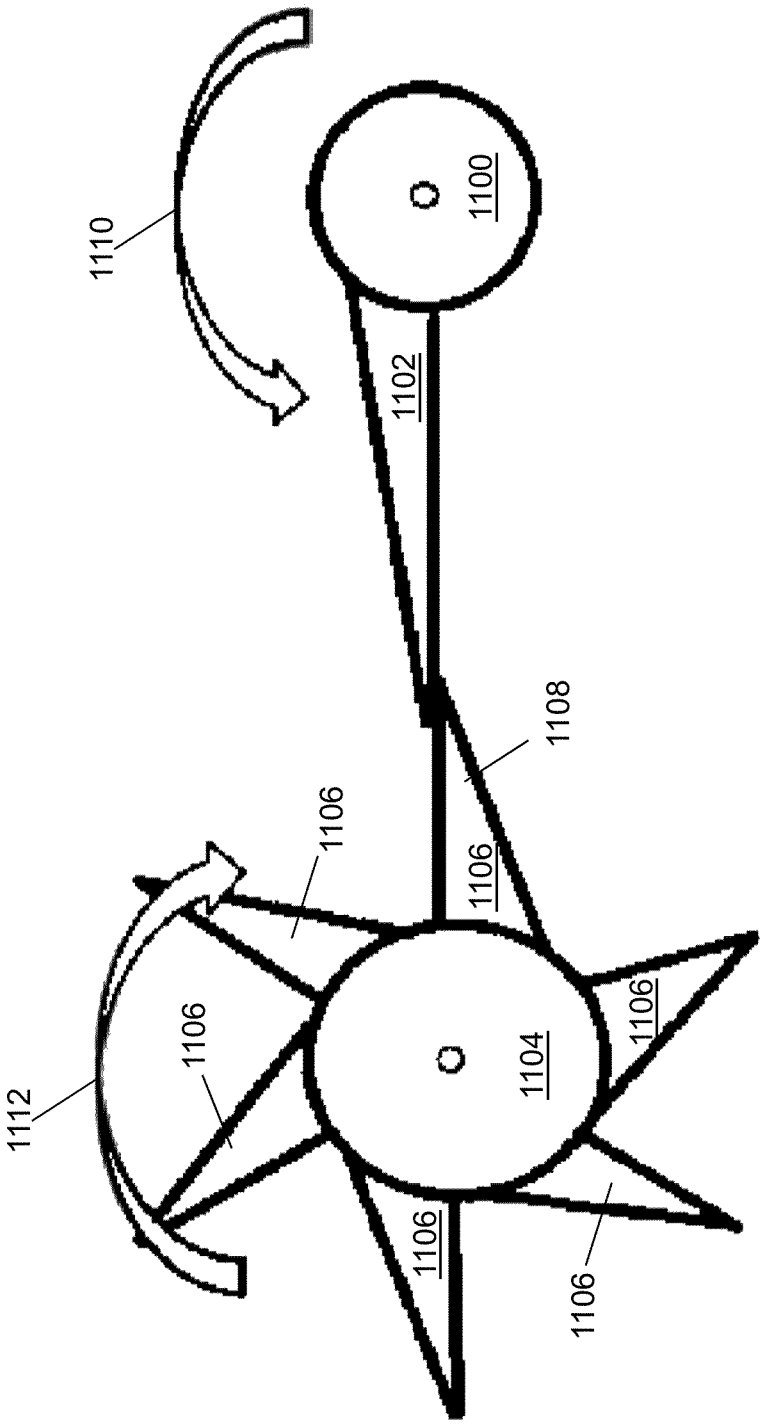
1110
1100
1102
1108
1106
1106
1106
1106
1112
1106
1104
1106
1106

Fig. 11

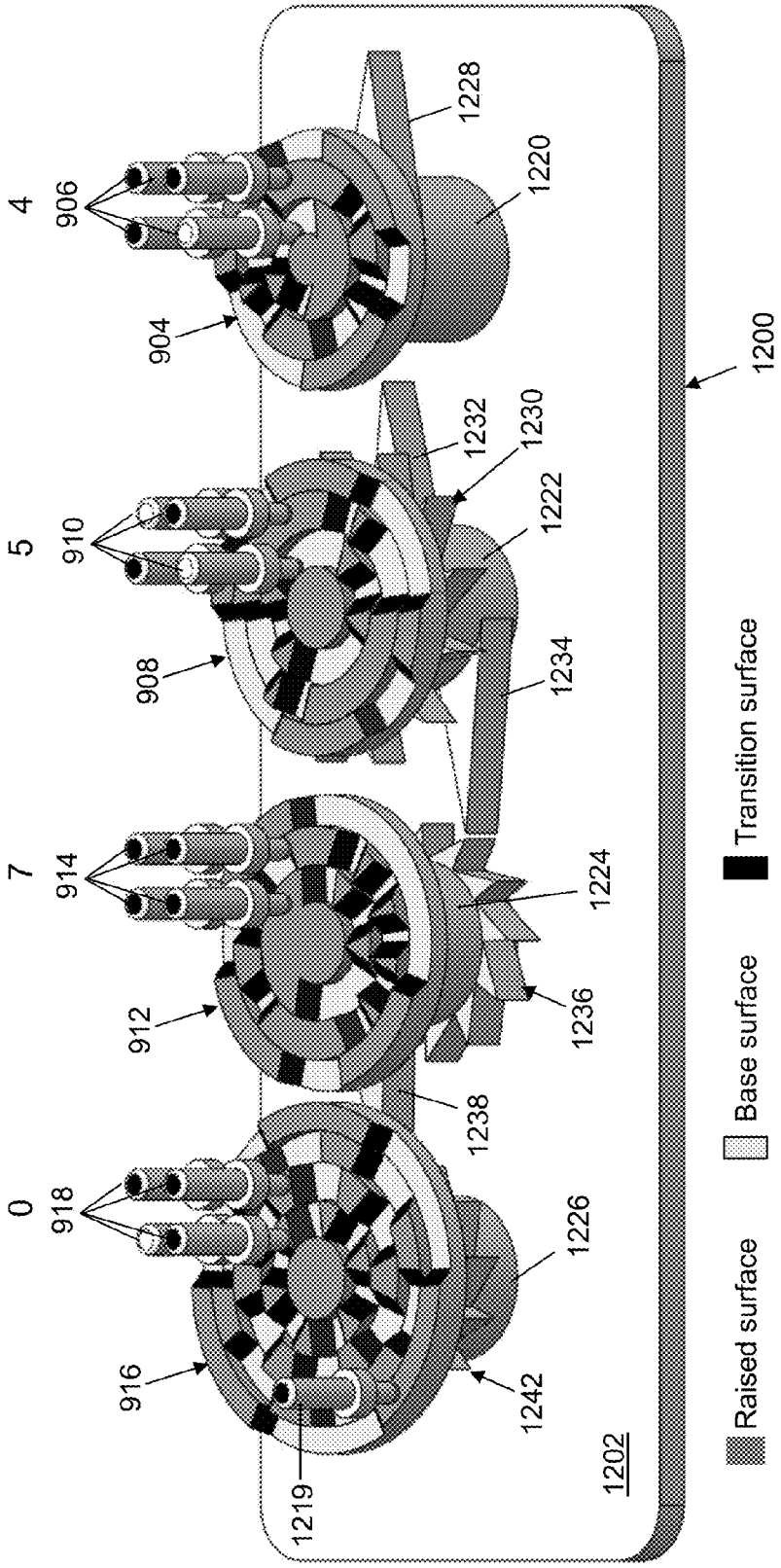
0
4
5
7
906
910
914
918
904
908
912
916
1228
1220
1232
1230
1222
1234
1224
1236
1238
1226
1242
1219
1202
1200
Raised surface
Base surface
Transition surface

Fig. 12a

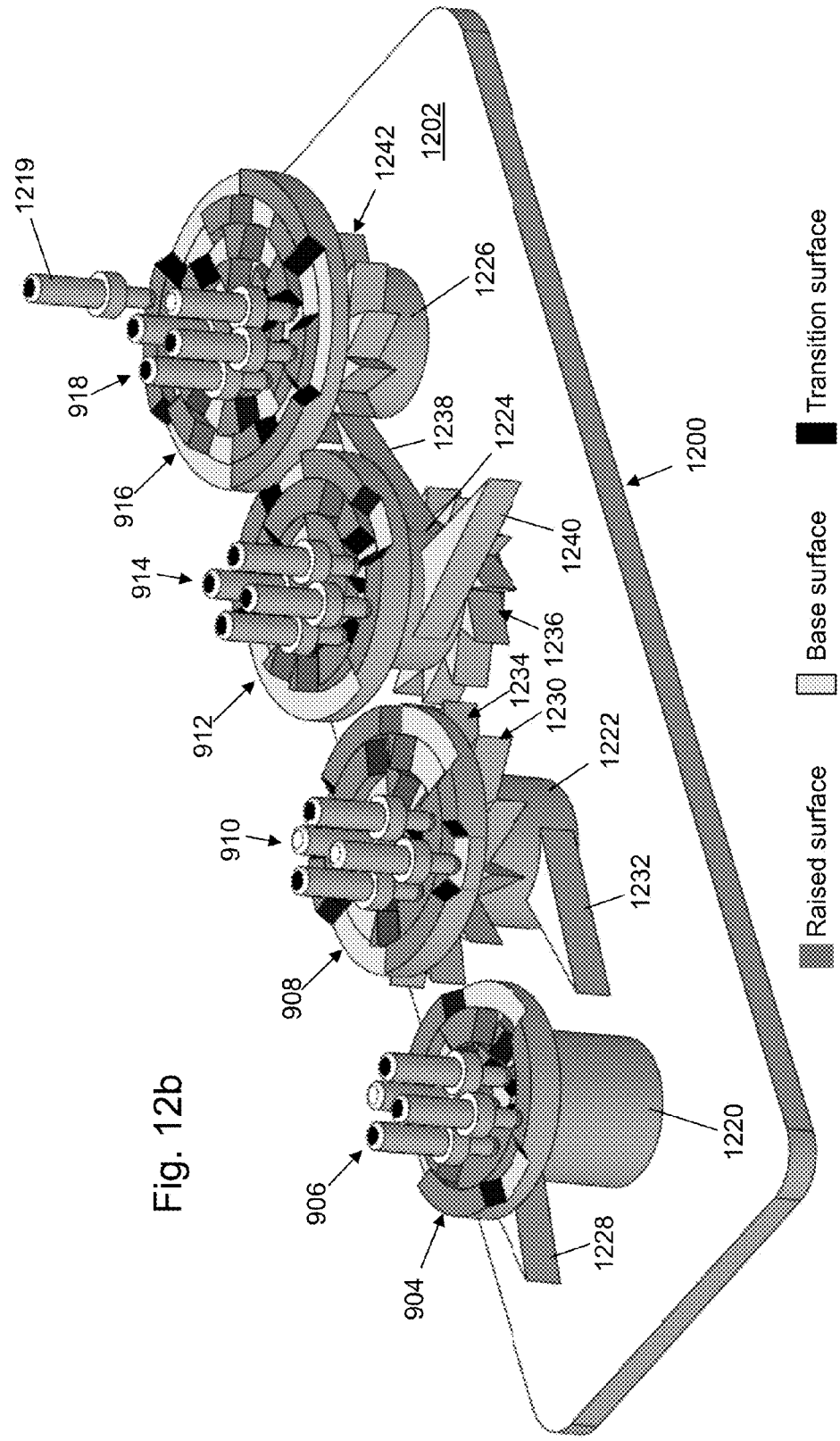
1219
1242
1202
1226
918
1238
1224
916
1200
914
1240
1236
1234
1230
912
1222
910
1232
908
1220
906
1228
904
Raised surface
Base surface
Transition surface

Fig. 12b

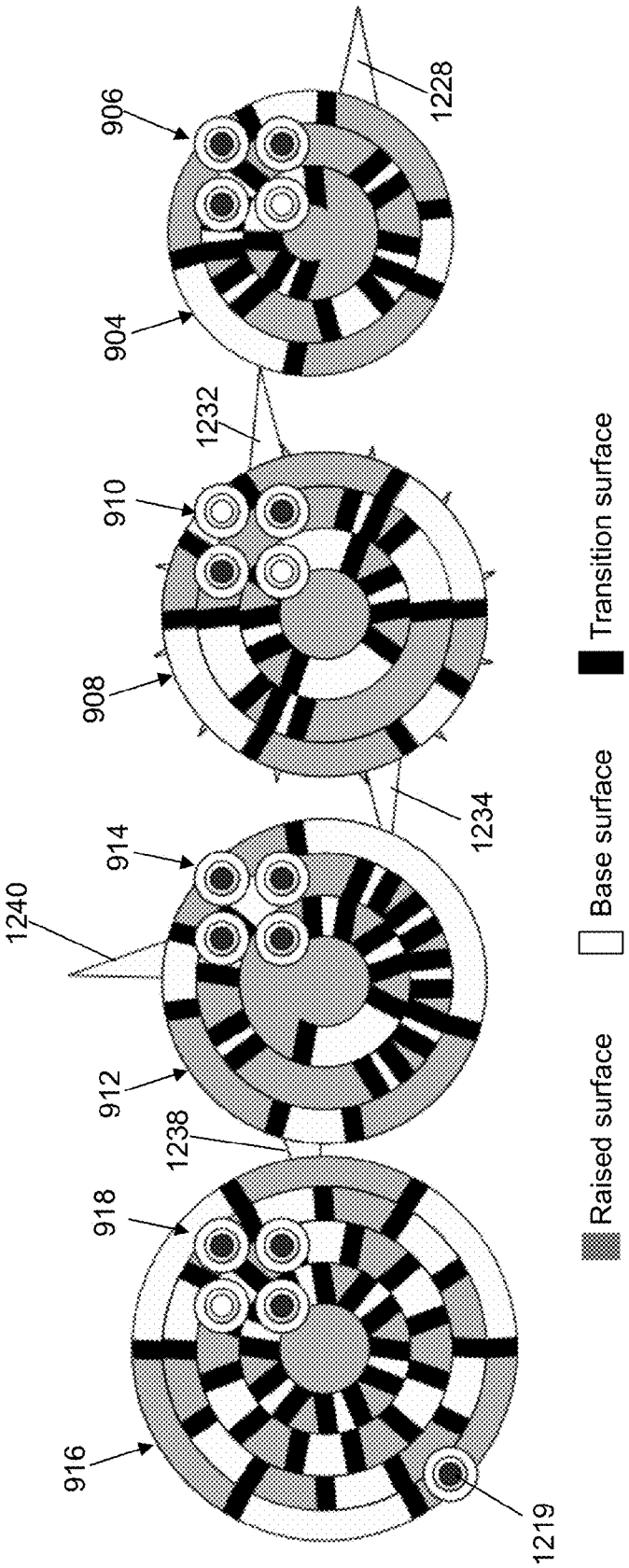
906
904
1228
1232
910
908
1234
914
1240
912
1238
918
916
1219
Raised surface
Base surface
Transition surface

Fig. 12c

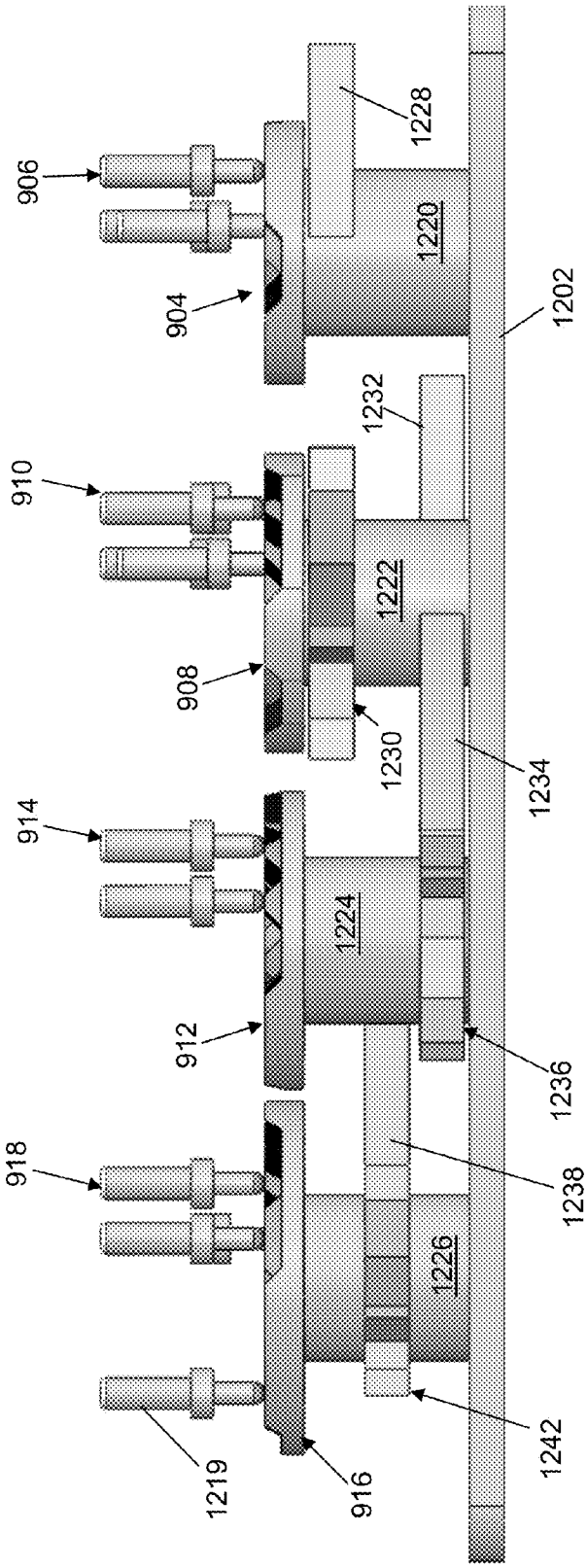
906
904
910
908
914
912
918
916
1219
1228
1220
1202
1232
1222
1230
1234
1224
1236
1238
1226
1242

Fig. 12d

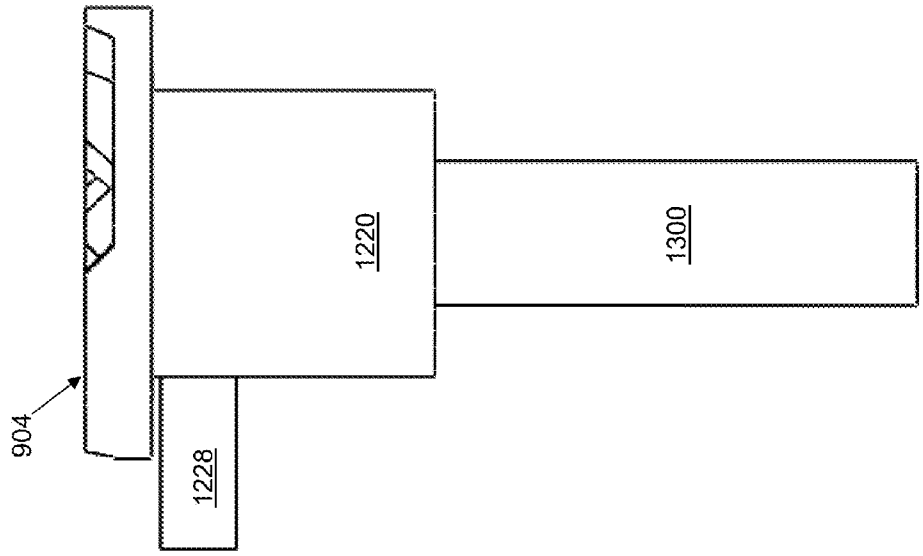

Fig. 13b

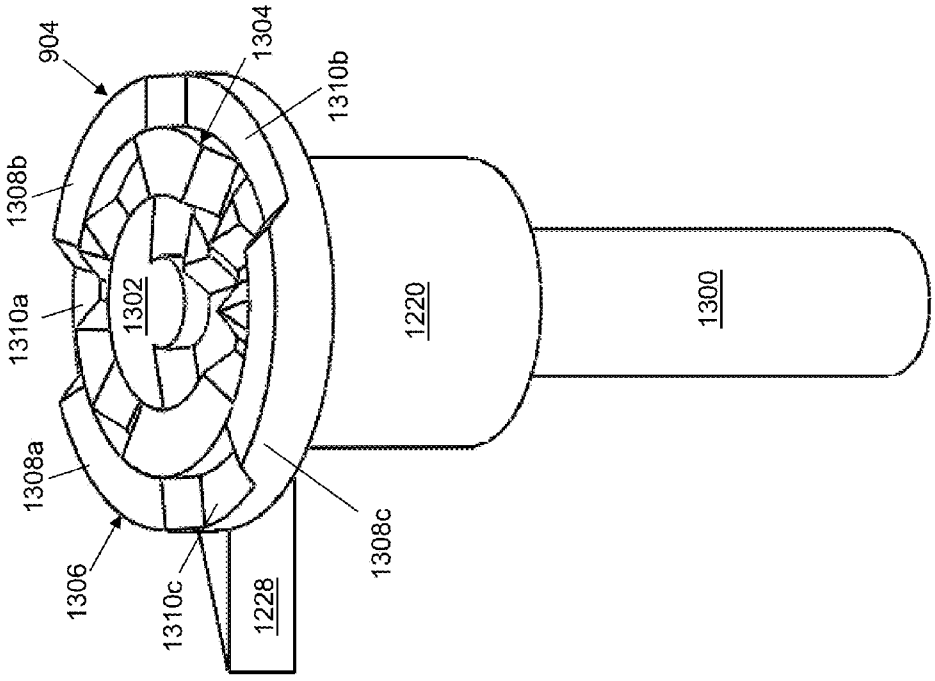

Fig. 13a

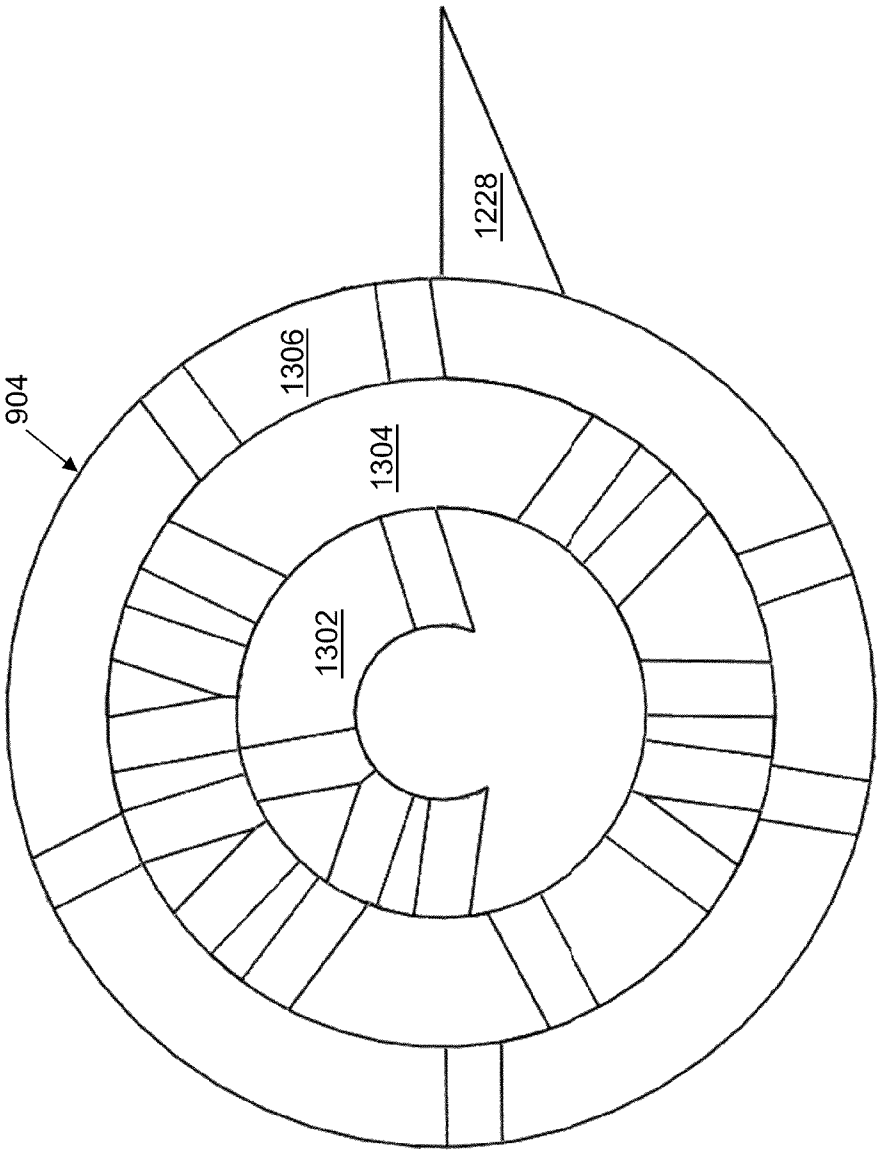

Fig. 13c

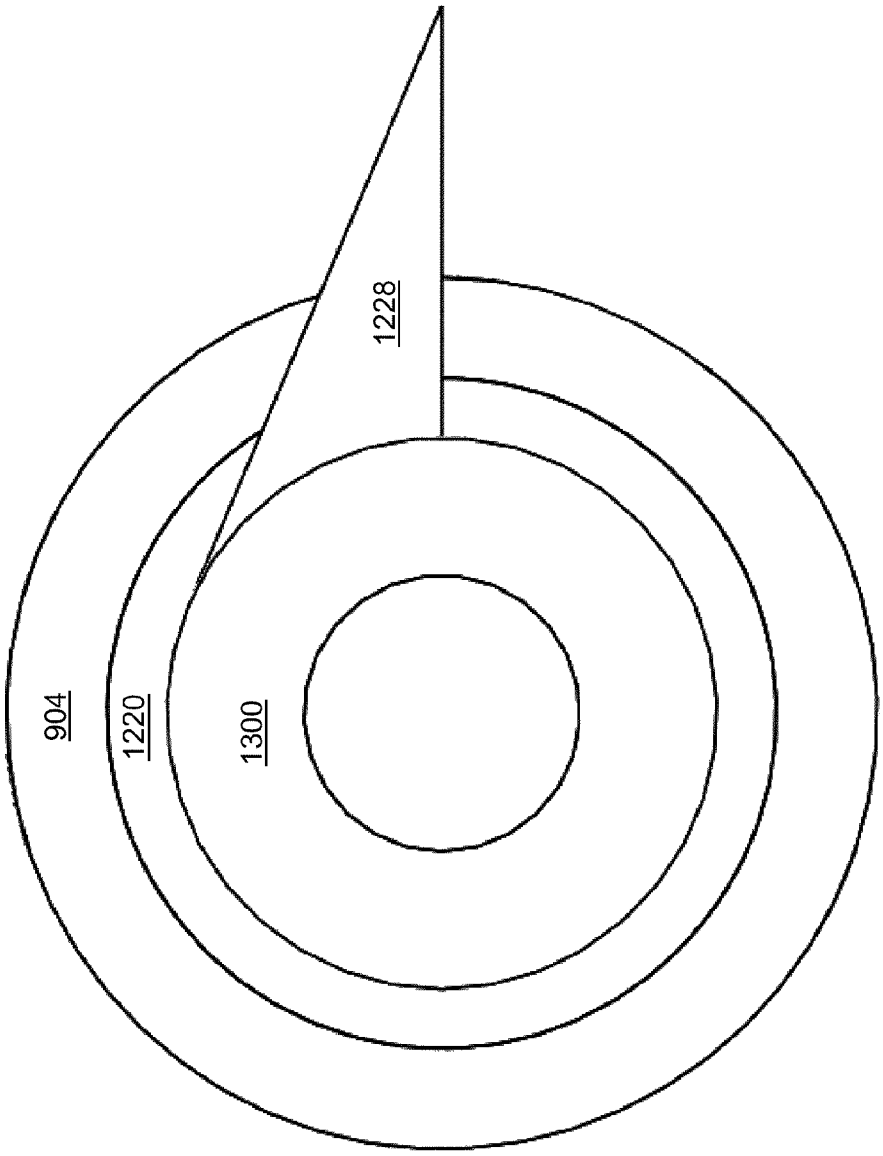

Fig. 13d

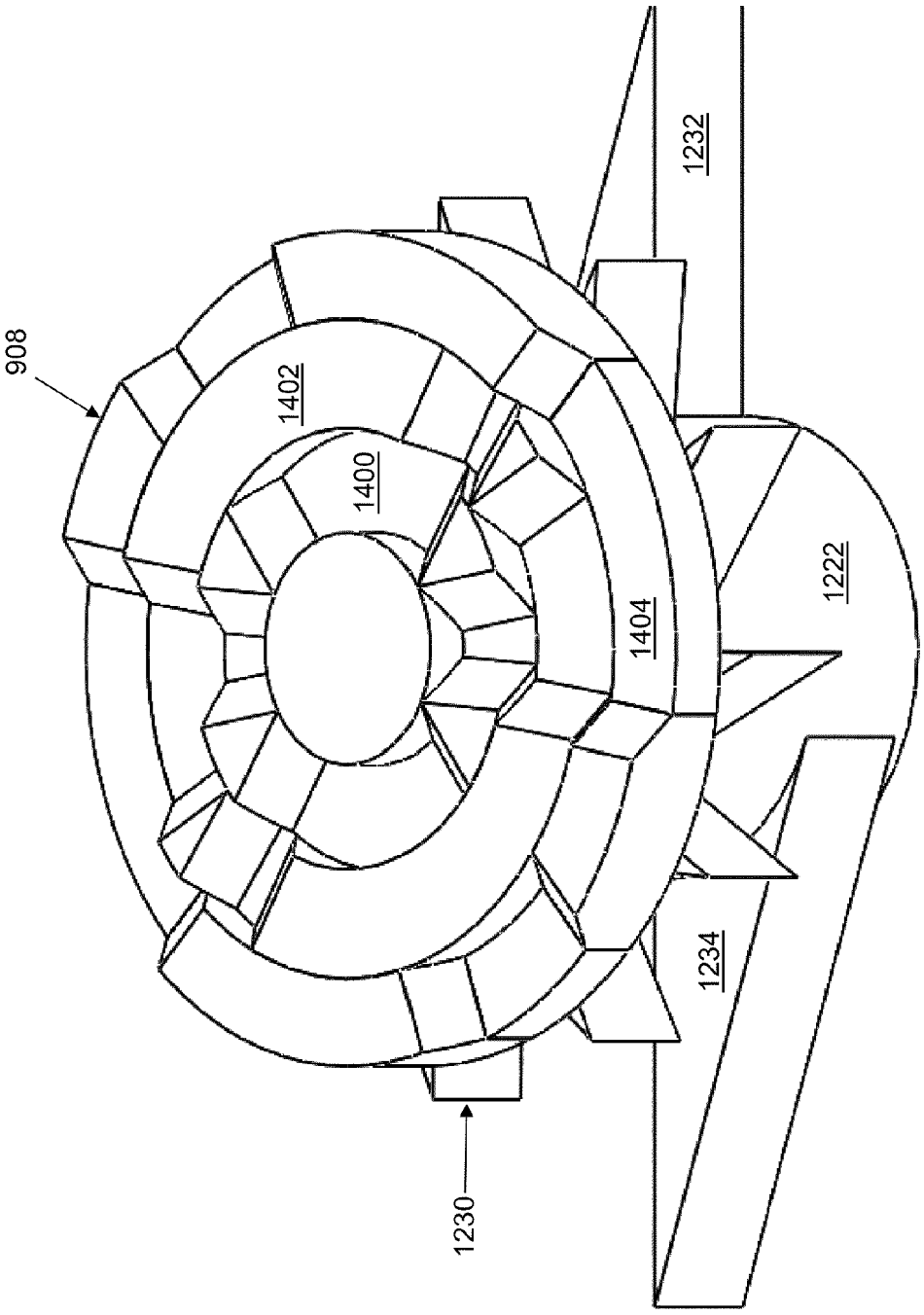

Fig. 14a

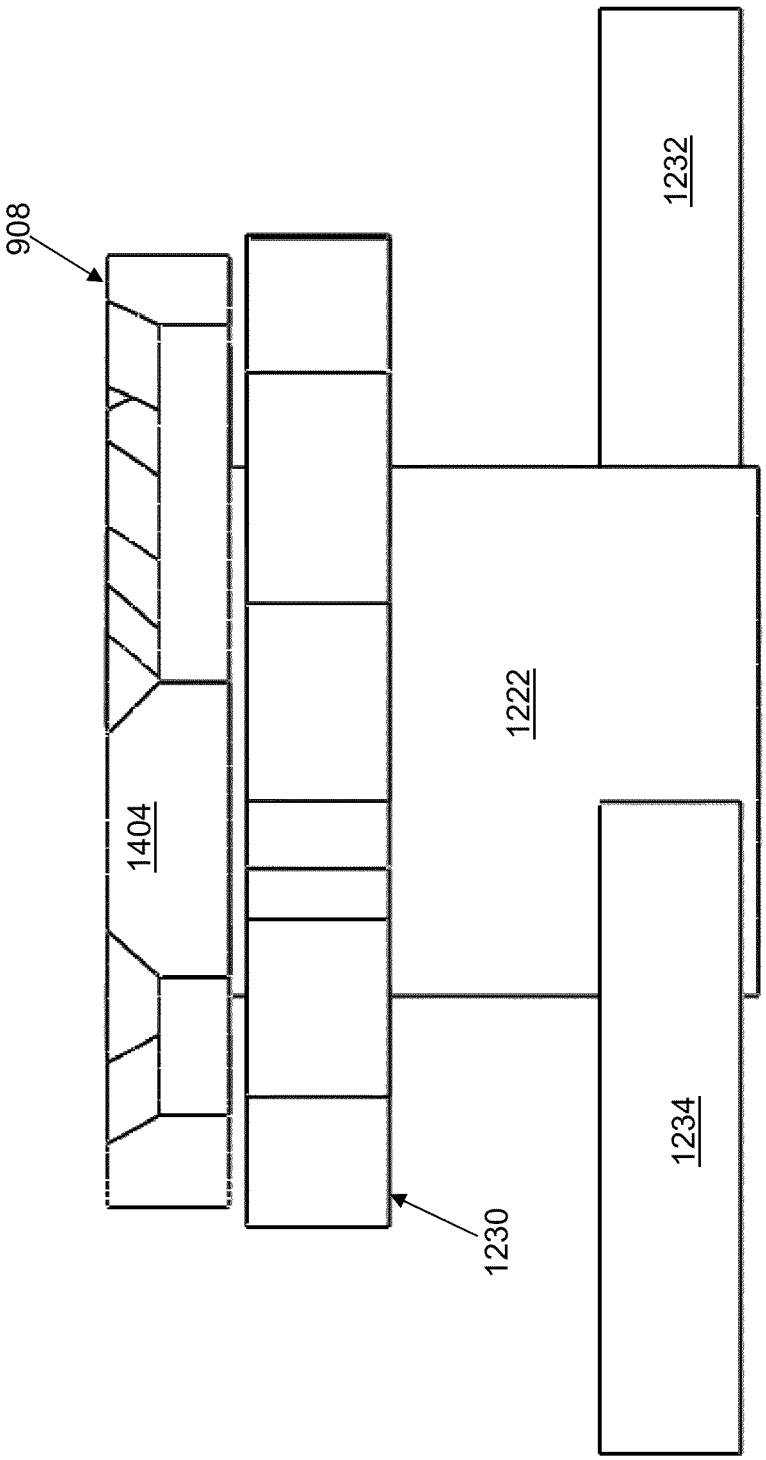

Fig. 14b

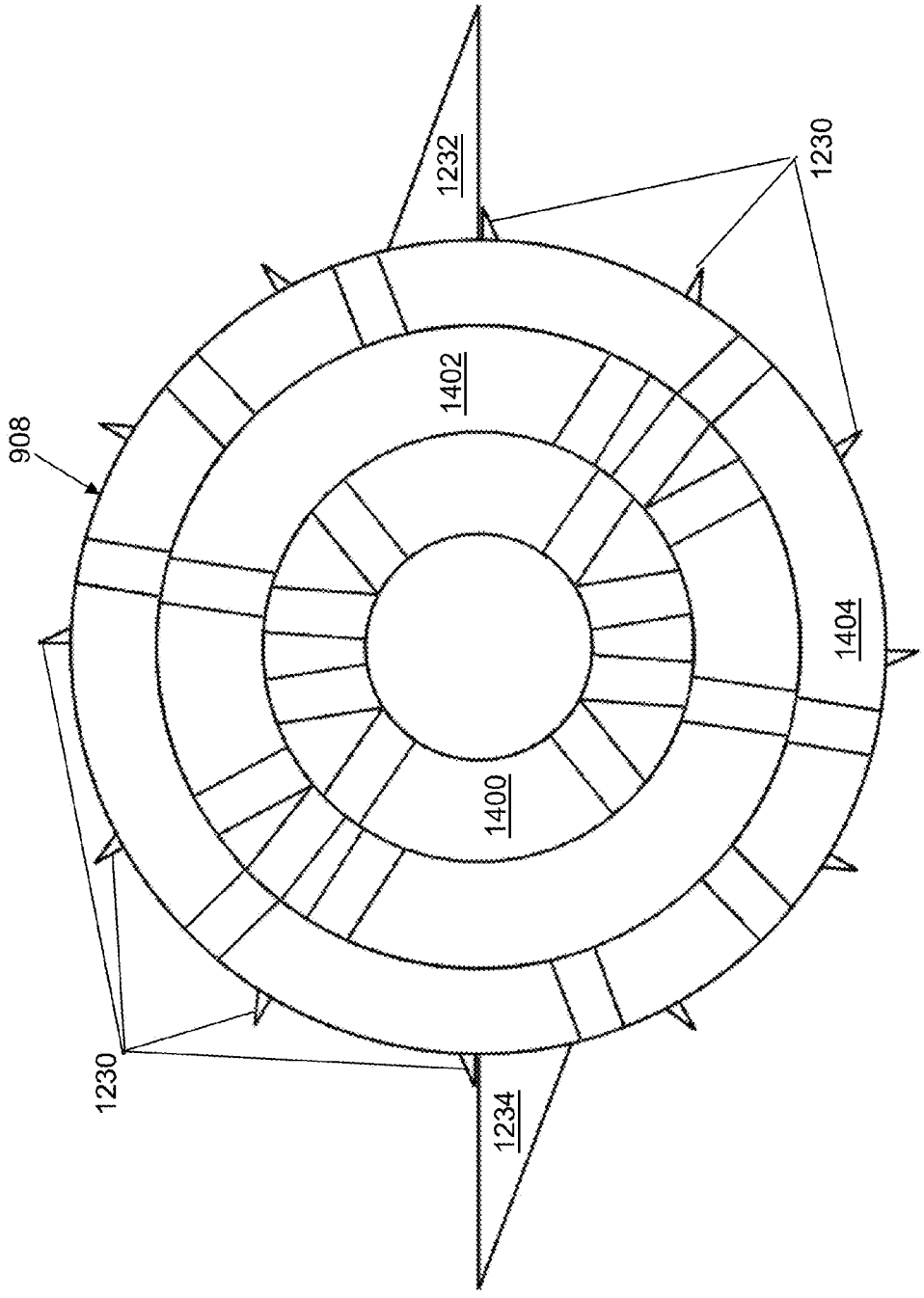

Fig. 14c

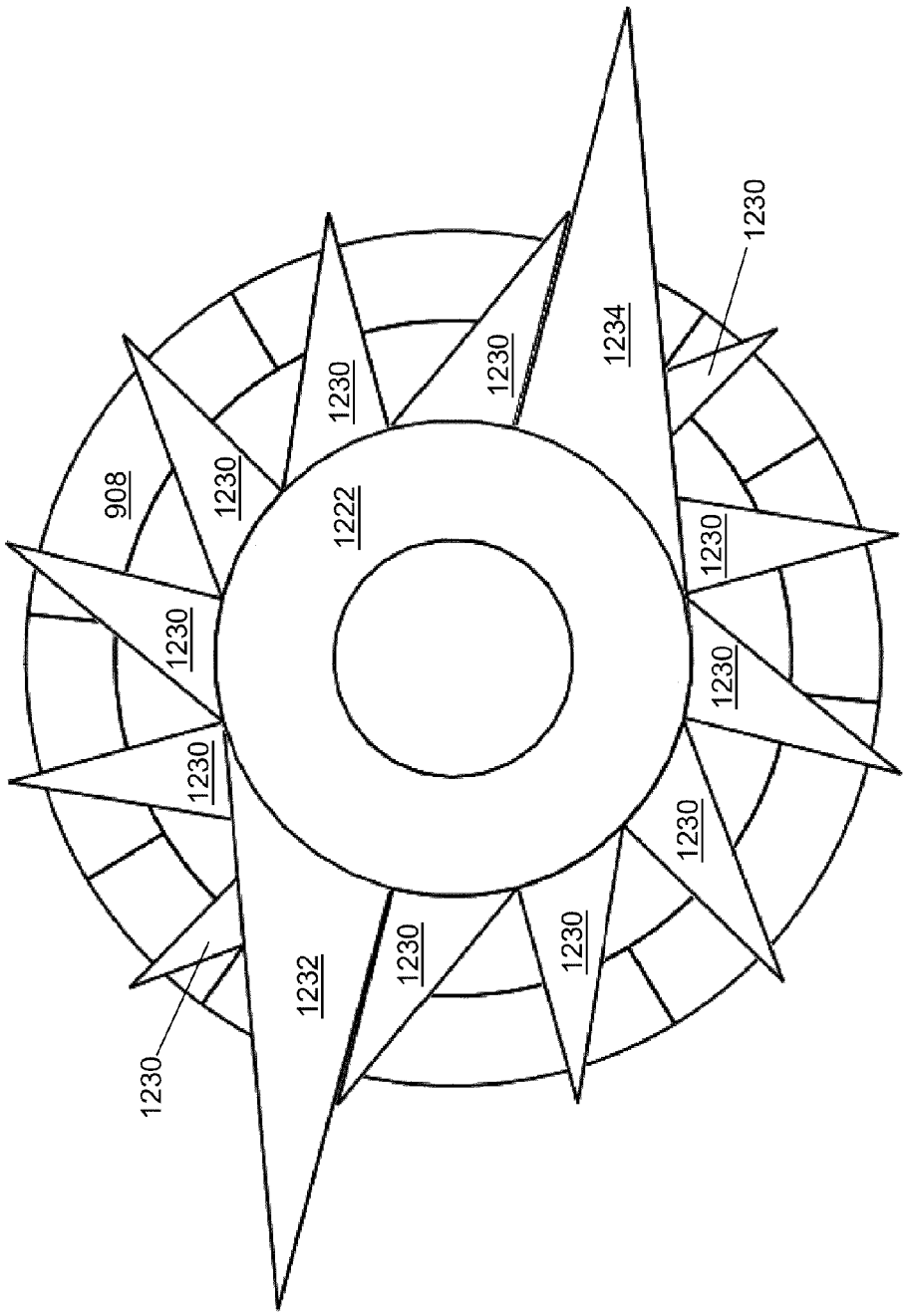
1230
1234
1230
1230
908
1230
1222
1230
1230
1230
1230
1230
1230
1230
1232
1230

Fig. 14d

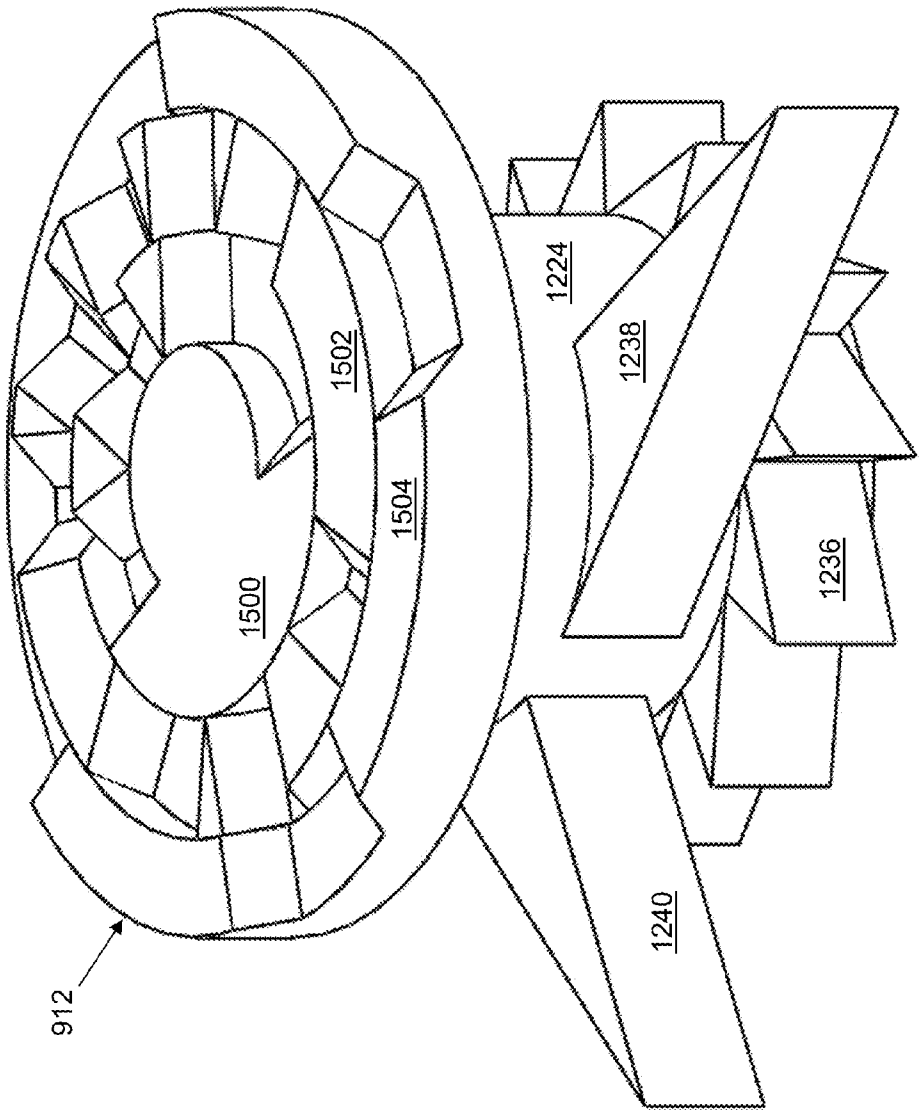

Fig. 15a

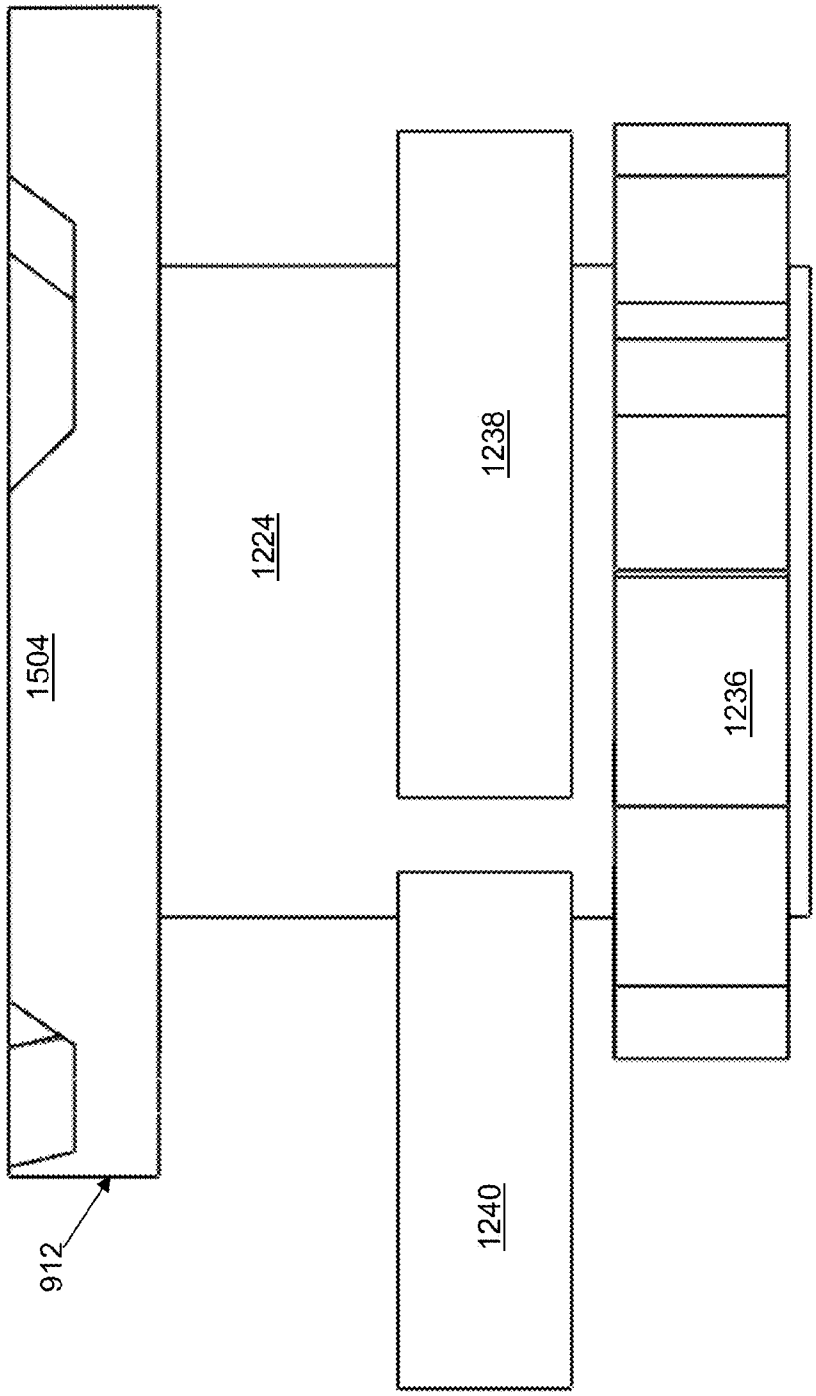

Fig. 15b

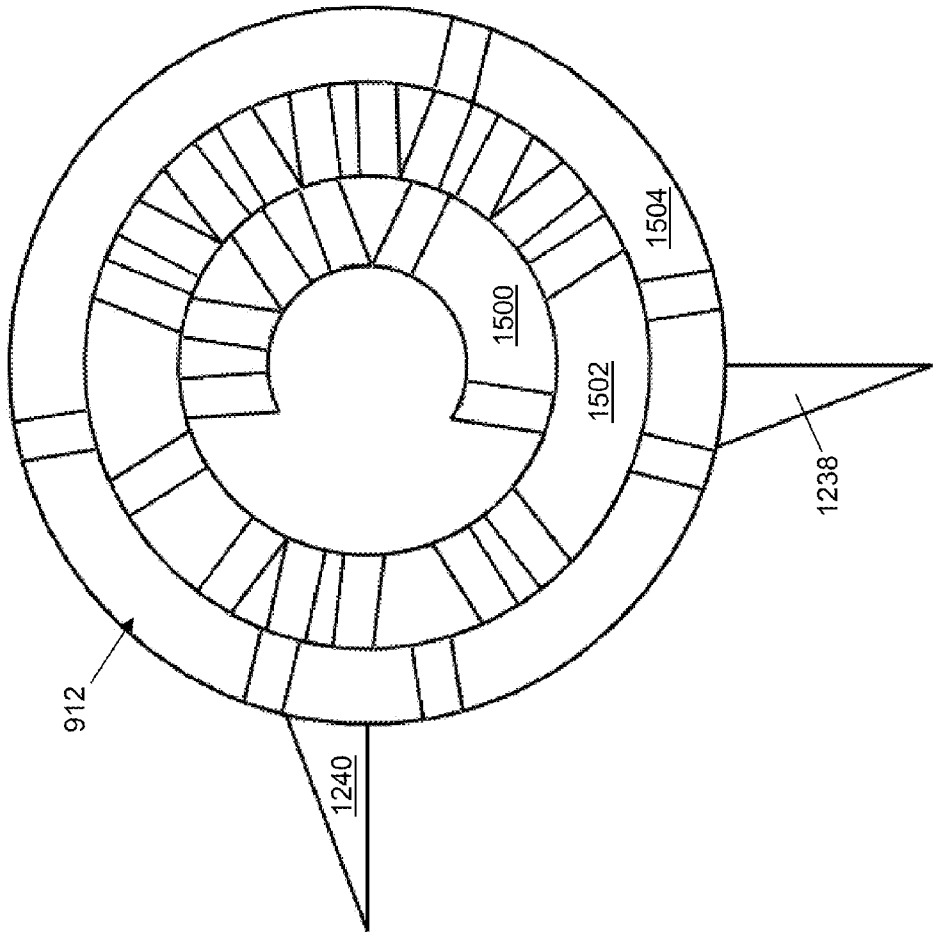

Fig. 15c

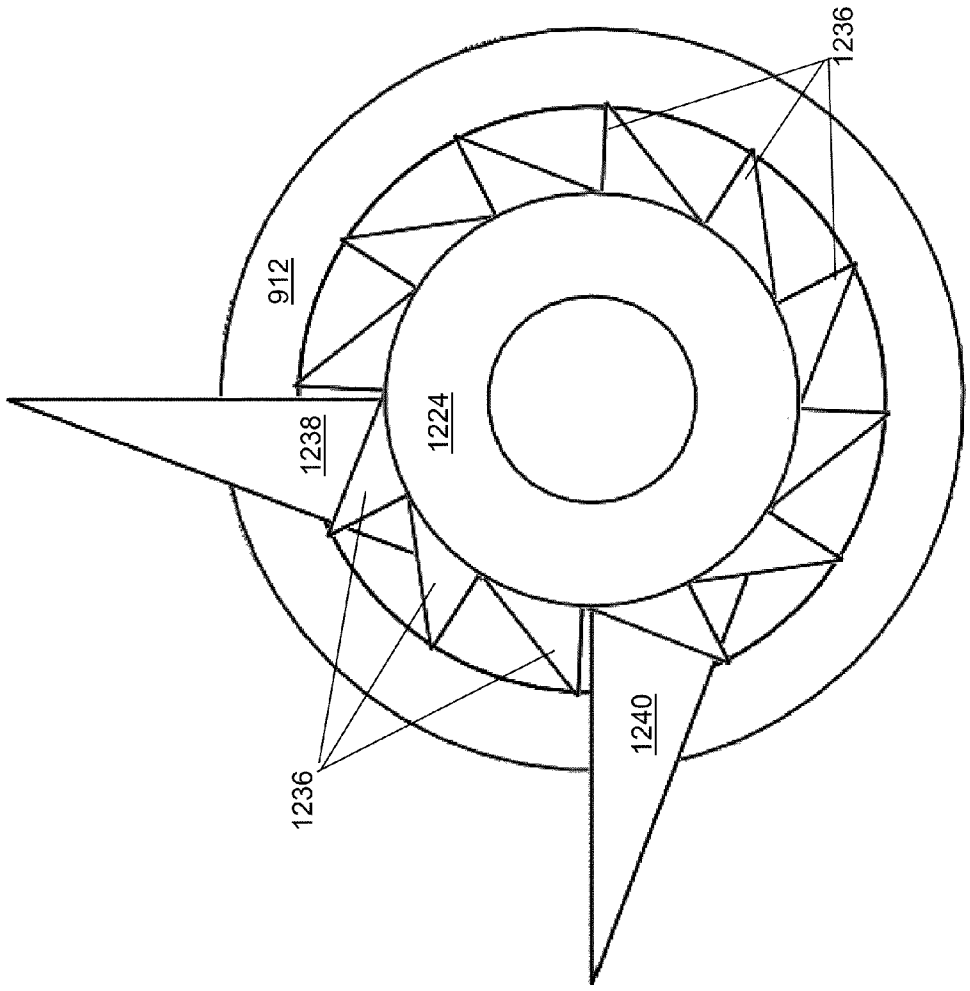

Fig. 15d

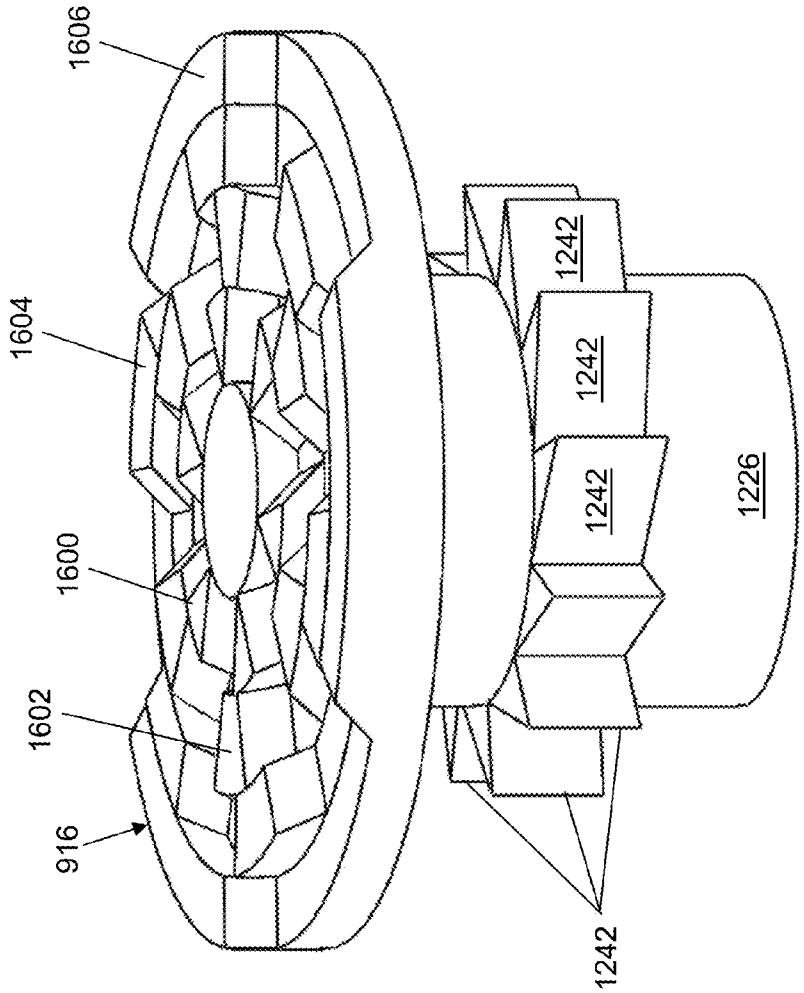

Fig. 16a

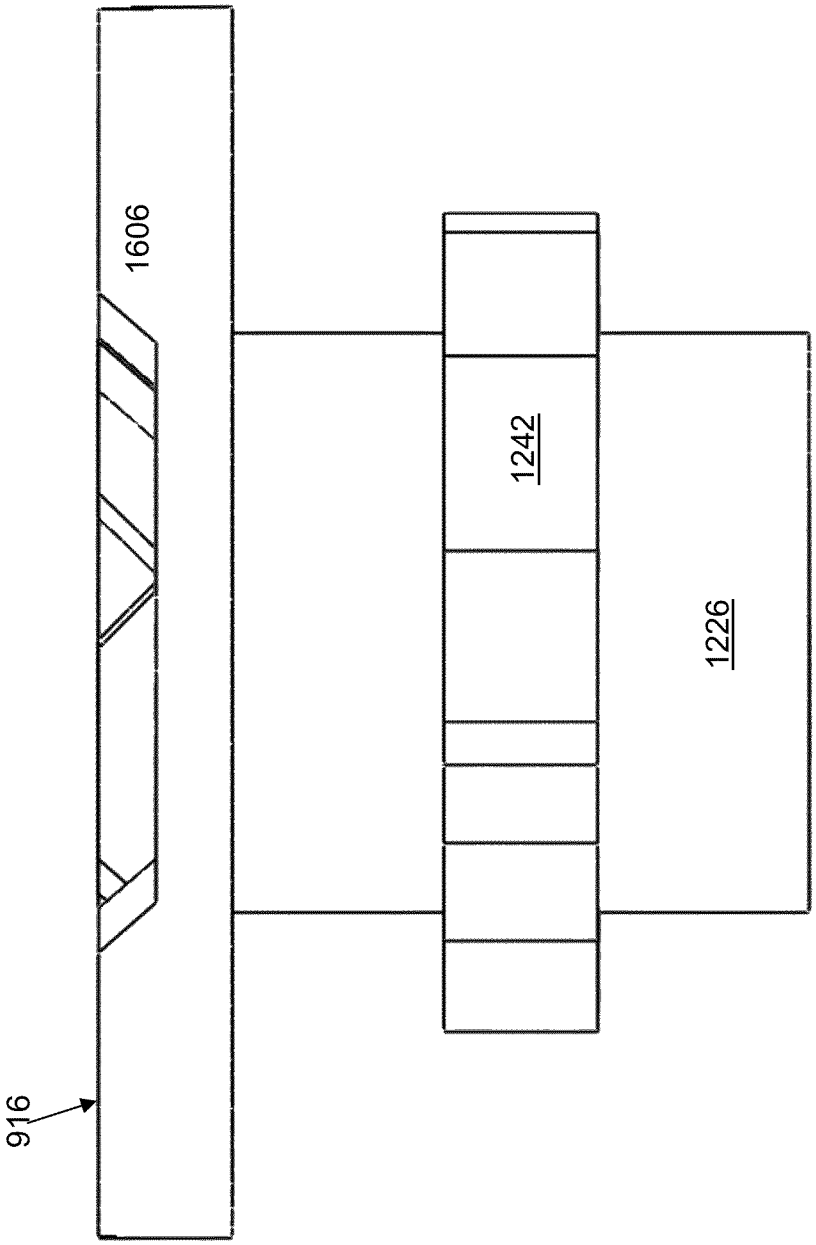

Fig. 16b

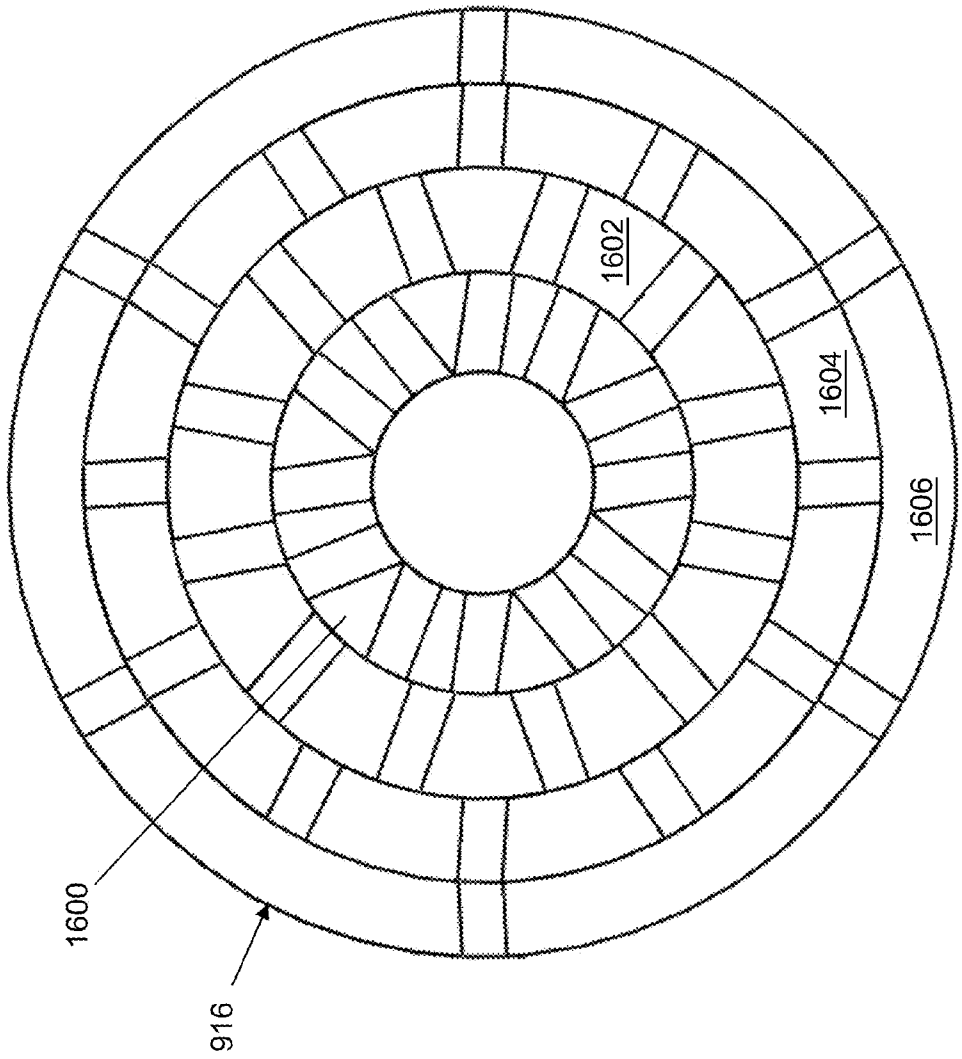

Fig. 16c

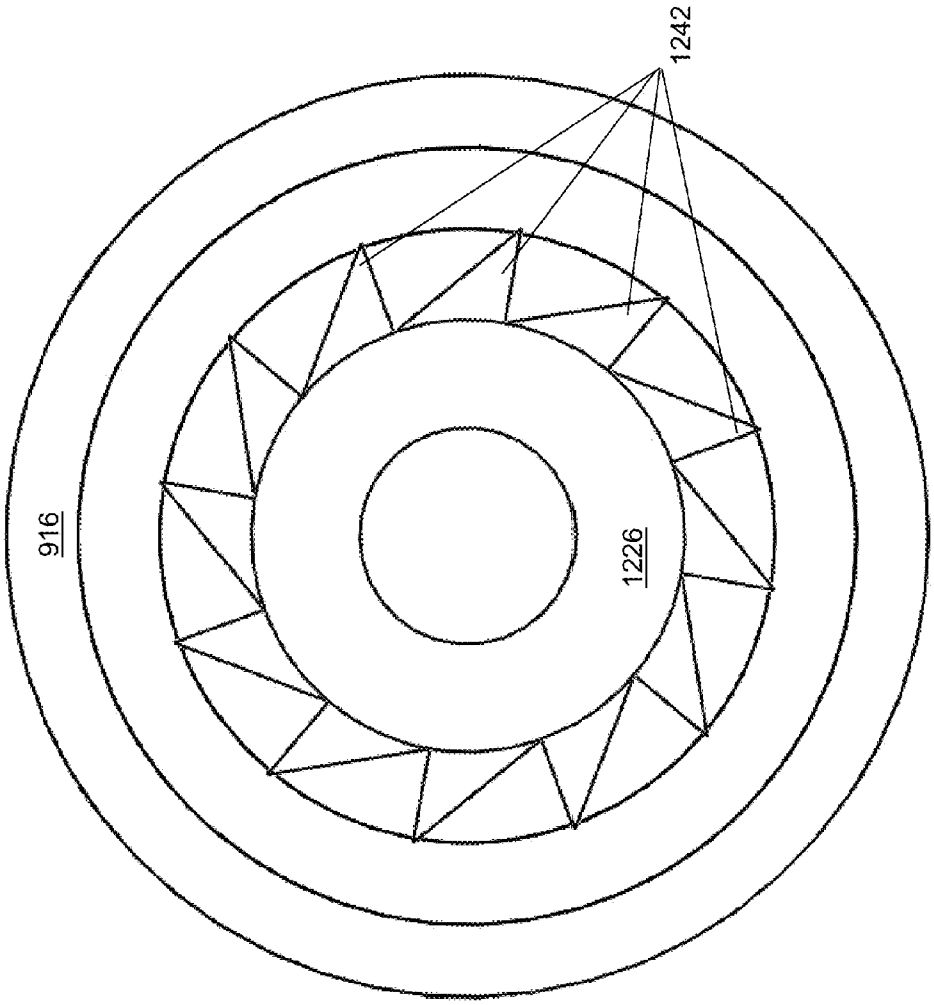

Fig. 16d

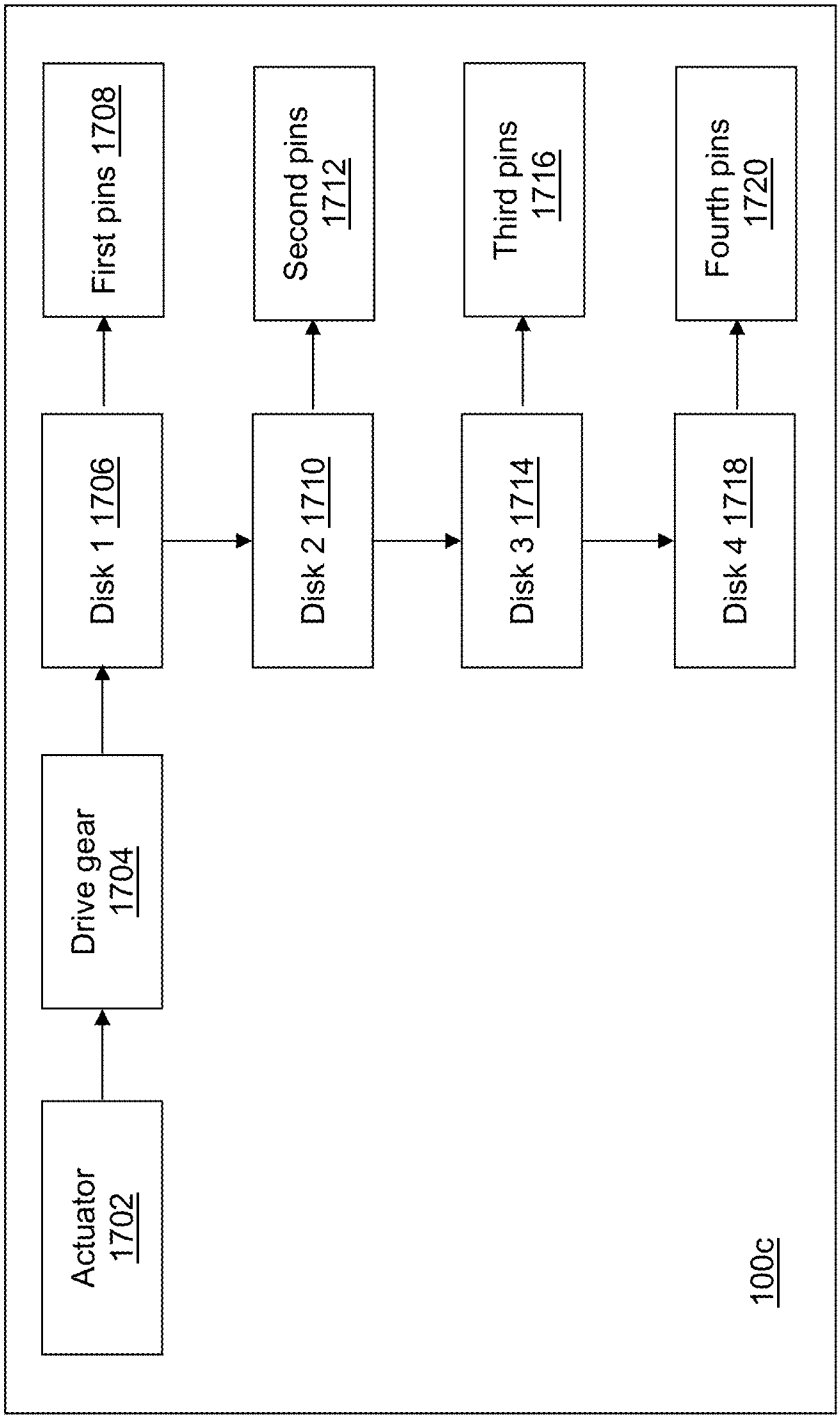
Actuator 1702
Drive gear 1704
Disk 1 1706
Disk 2 1710
Disk 3 1714
Disk 4 1718
First pins 1708
Second pins 1712
Third pins 1716
Fourth pins 1720
100c

Fig. 17

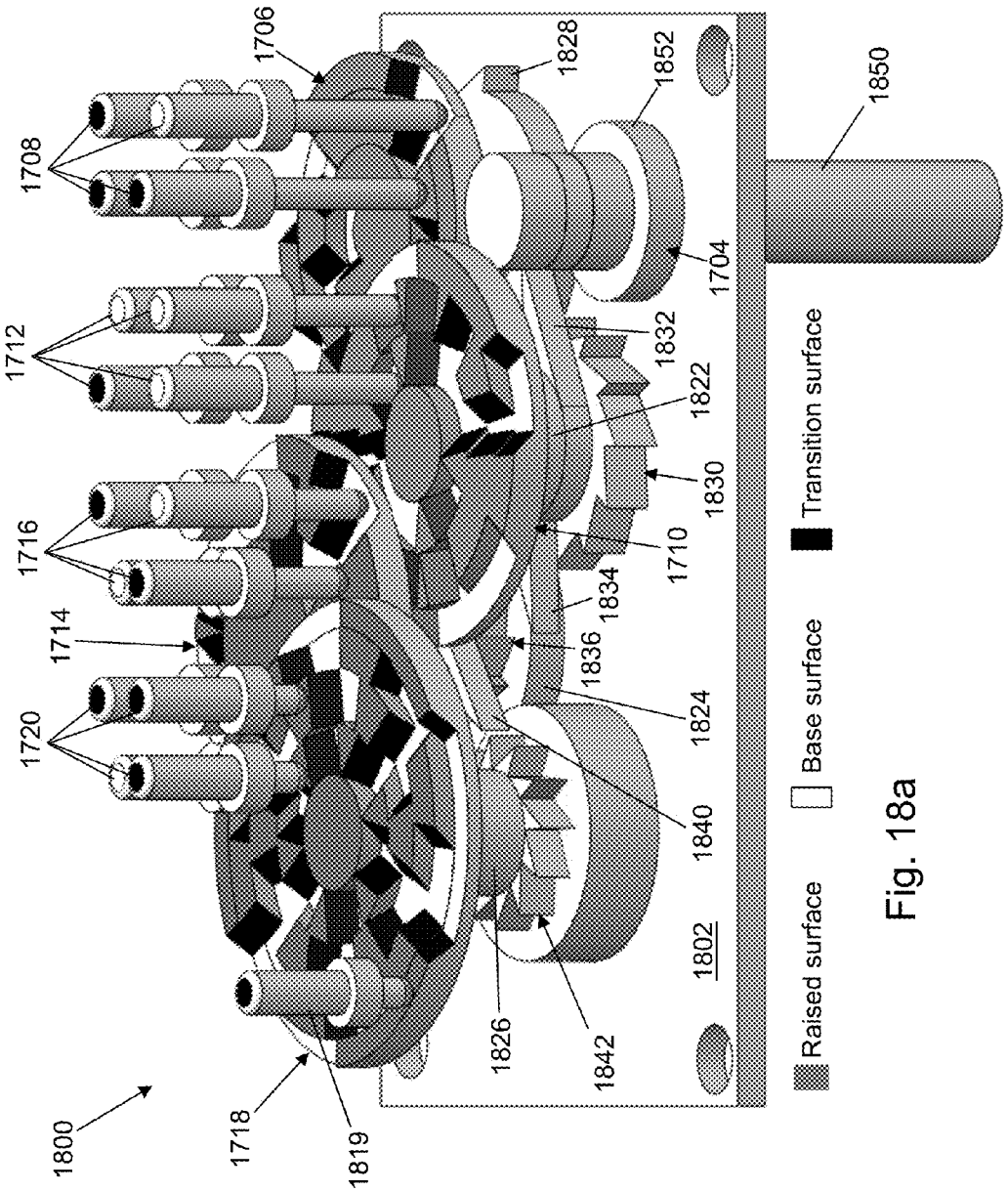
1800
1718
1819
1706
1708
1712
1716
1714
1720
1826
1842
1828
1852
1850
1704
1832
1822
1830
1710
1834
1836
1824
1840
1802
Raised surface
Base surface
Transition surface

Fig. 18a

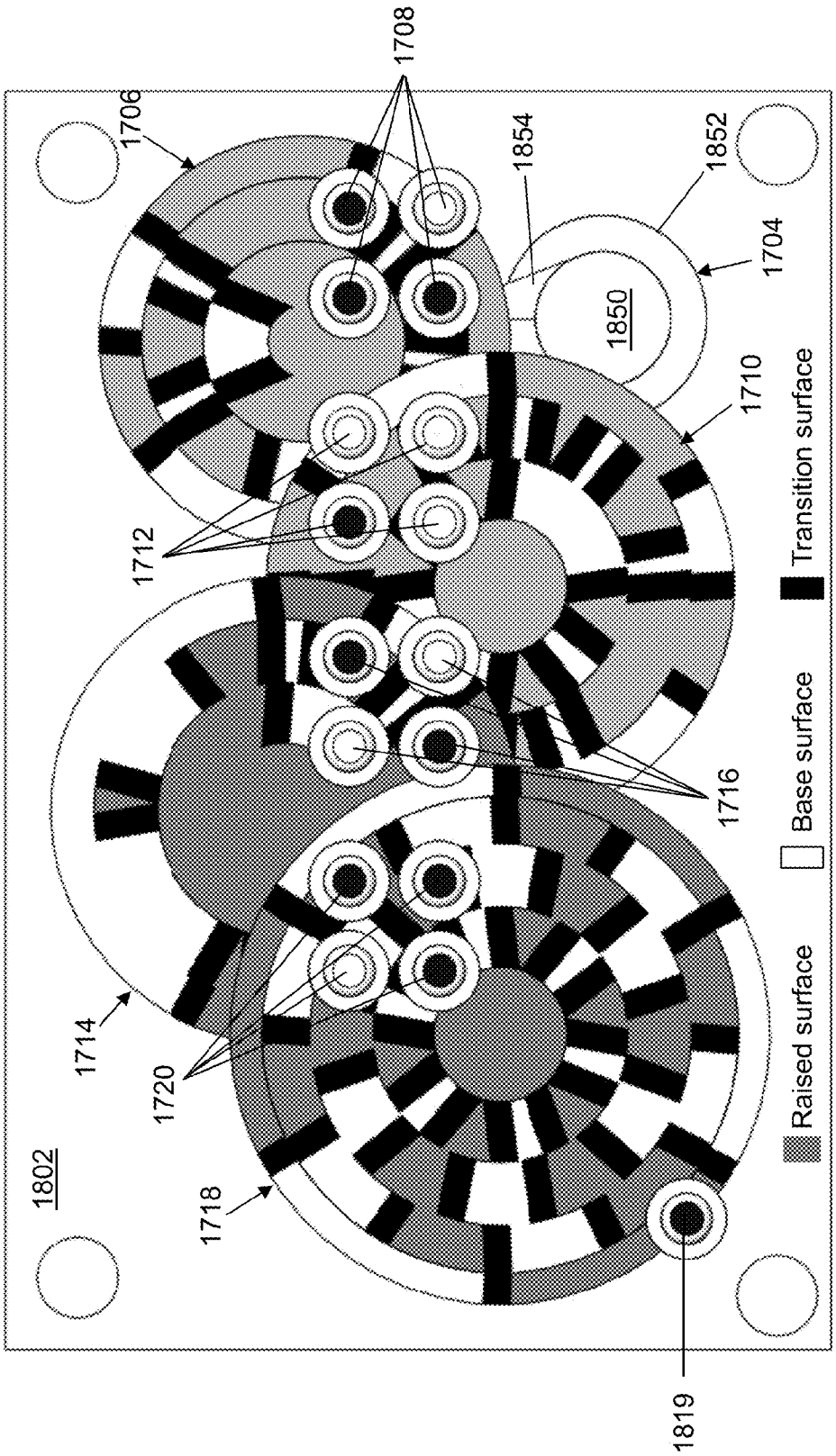
1708
1706
1854
1852
1704
1850
1710
1712
1716
1714
1720
1718
1802
1819
Raised surface
Base surface
Transition surface

Fig. 18b

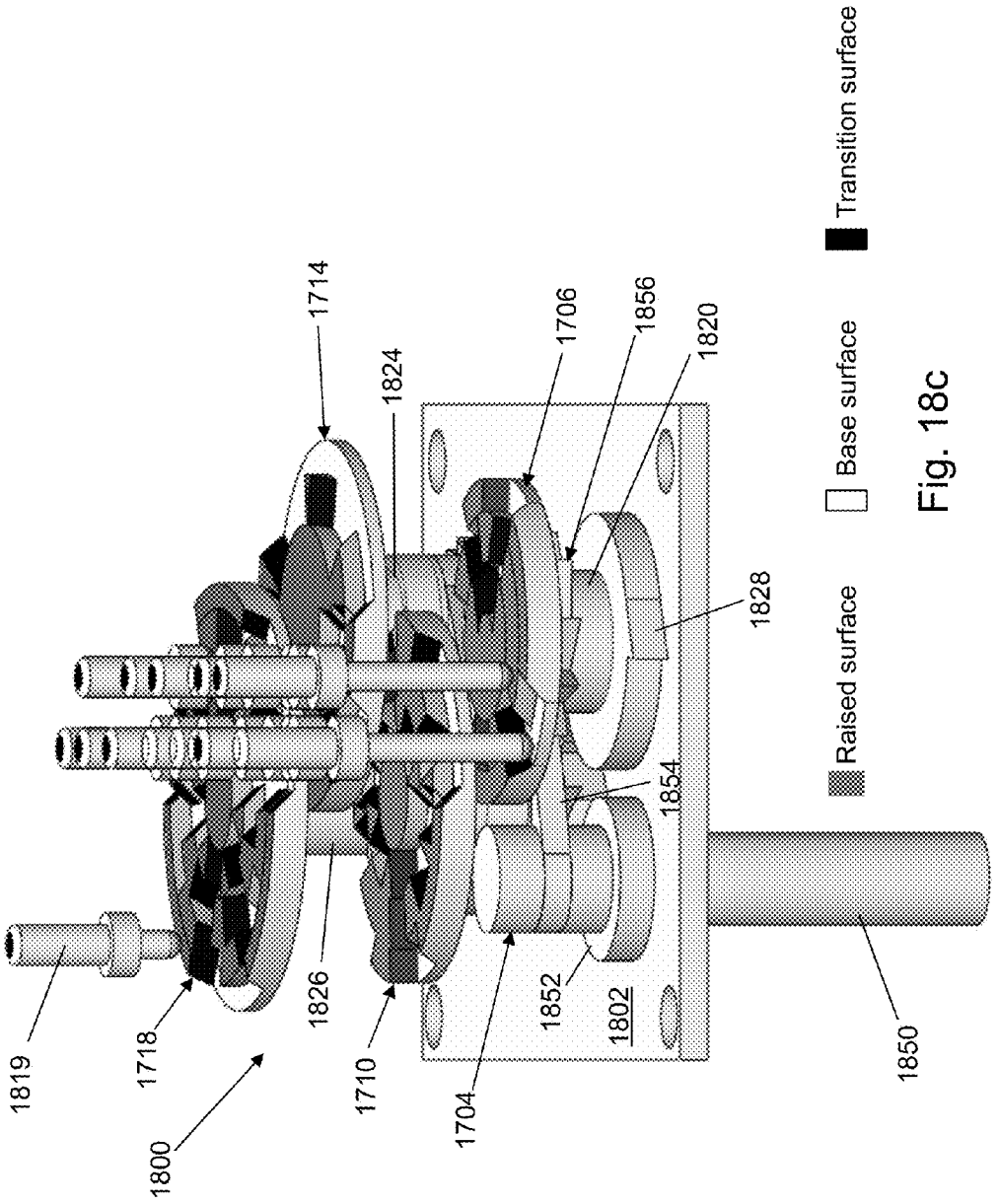
1714
1824
1706
1856
1820
1828
1854
1852
1802
1826
1710
1704
1819
1718
1800
1850
Raised surface
Base surface
Transition surface

Fig. 18c

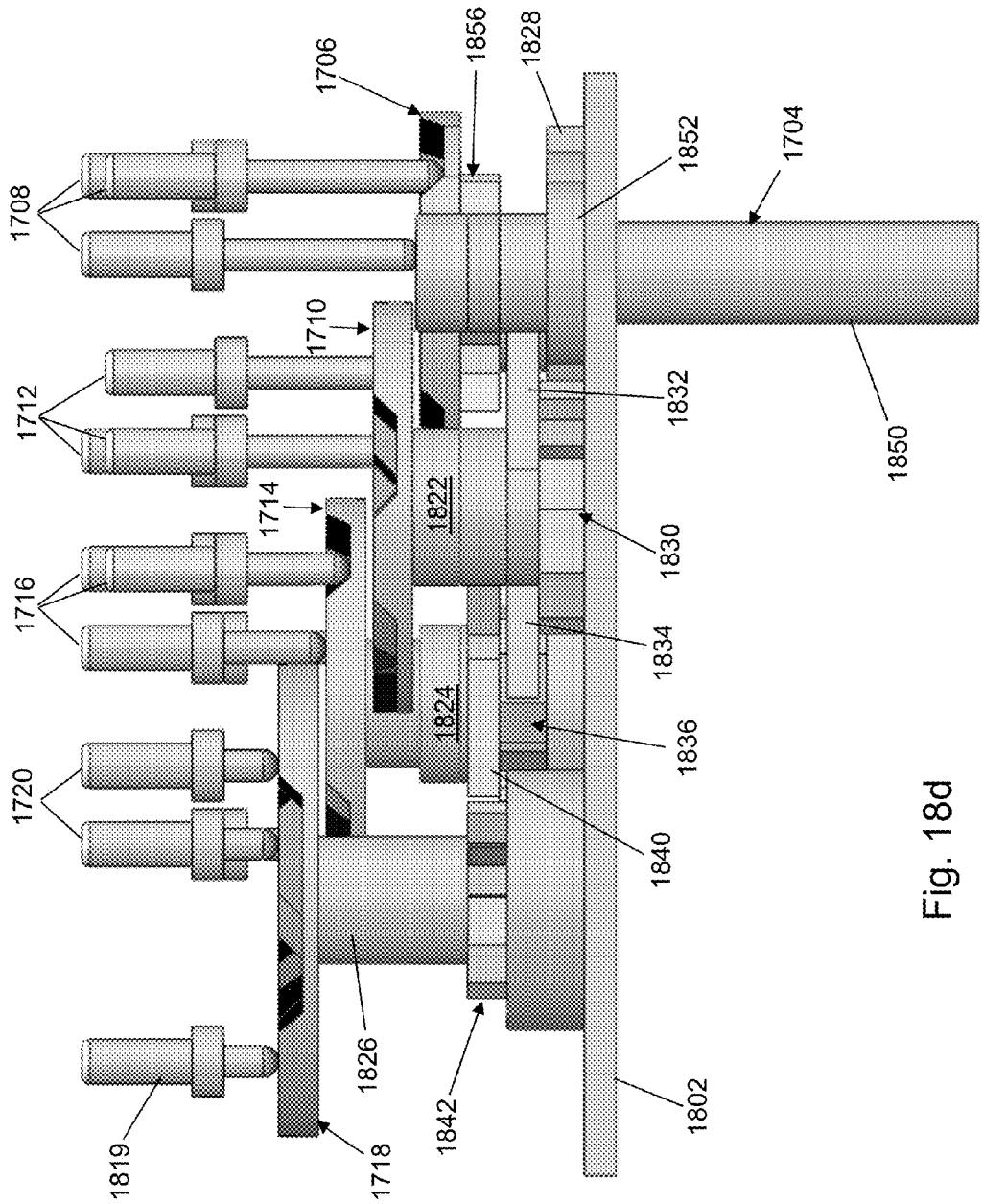
1706
1856
1828
1708
1852
1704
1710
1712
1832
1850
1822
1714
1716
1830
1834
1824
1836
1720
1840
1826
1842
1819
1718
1802

Fig. 18d

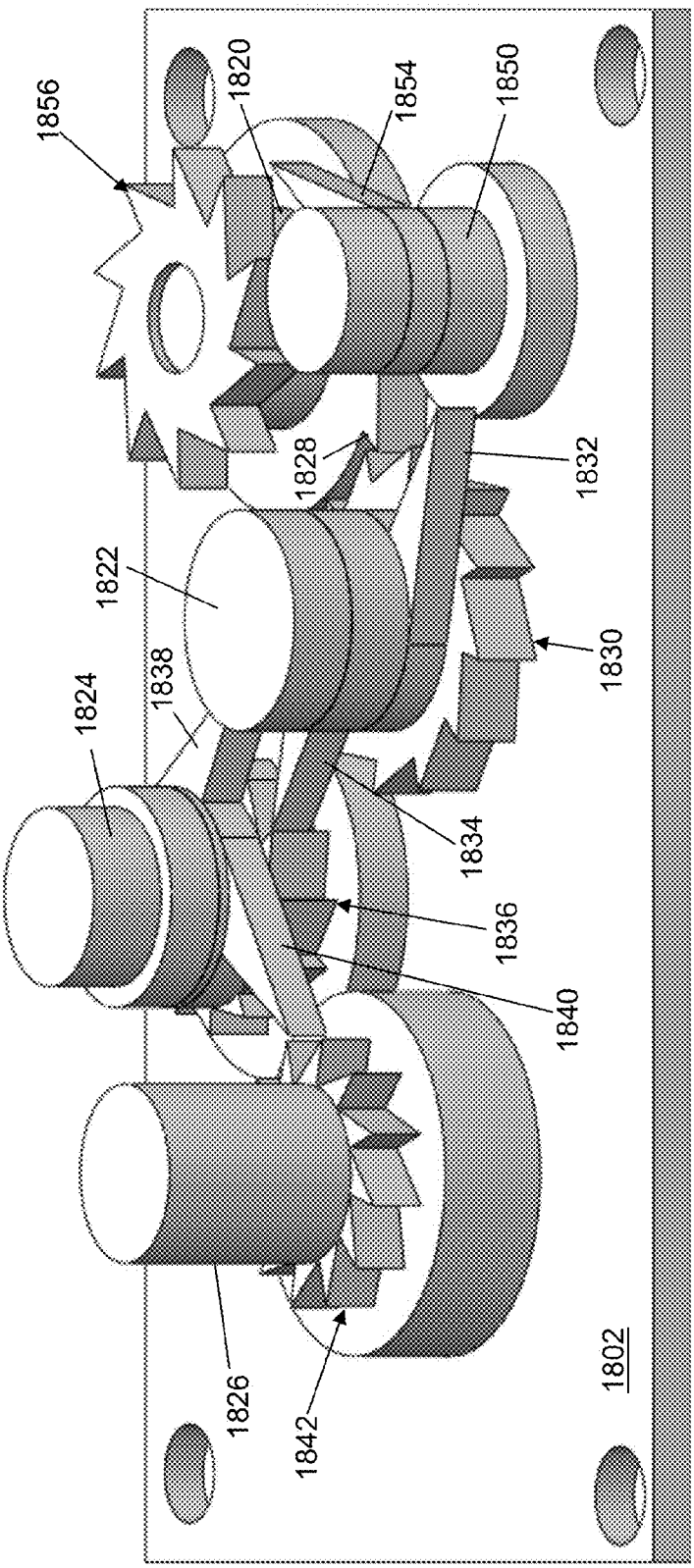
1856
1820
1854
1850
1828
1832
1822
1838
1824
1830
1834
1836
1840
1826
1842
1802

Fig. 18e

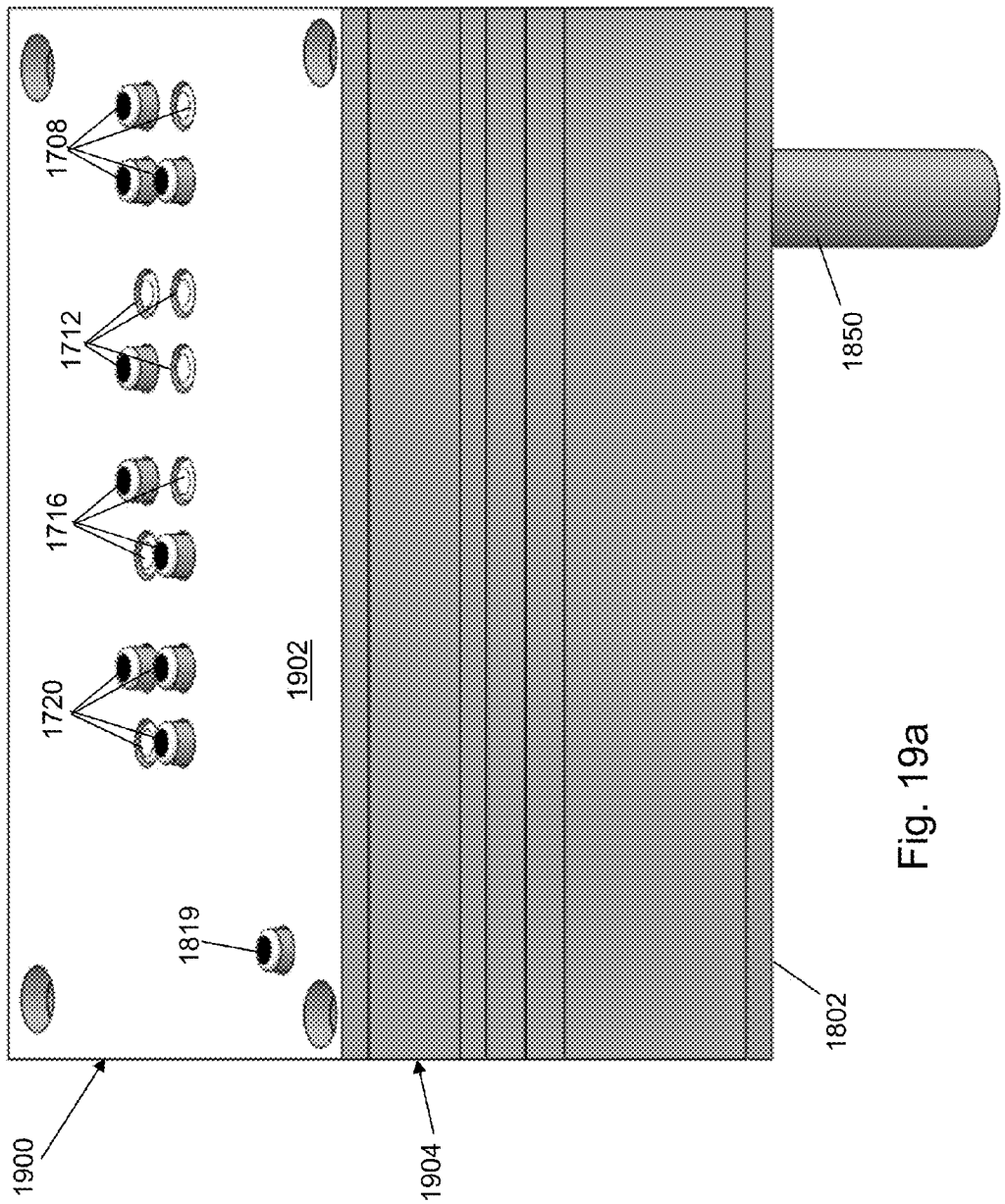

Fig. 19a

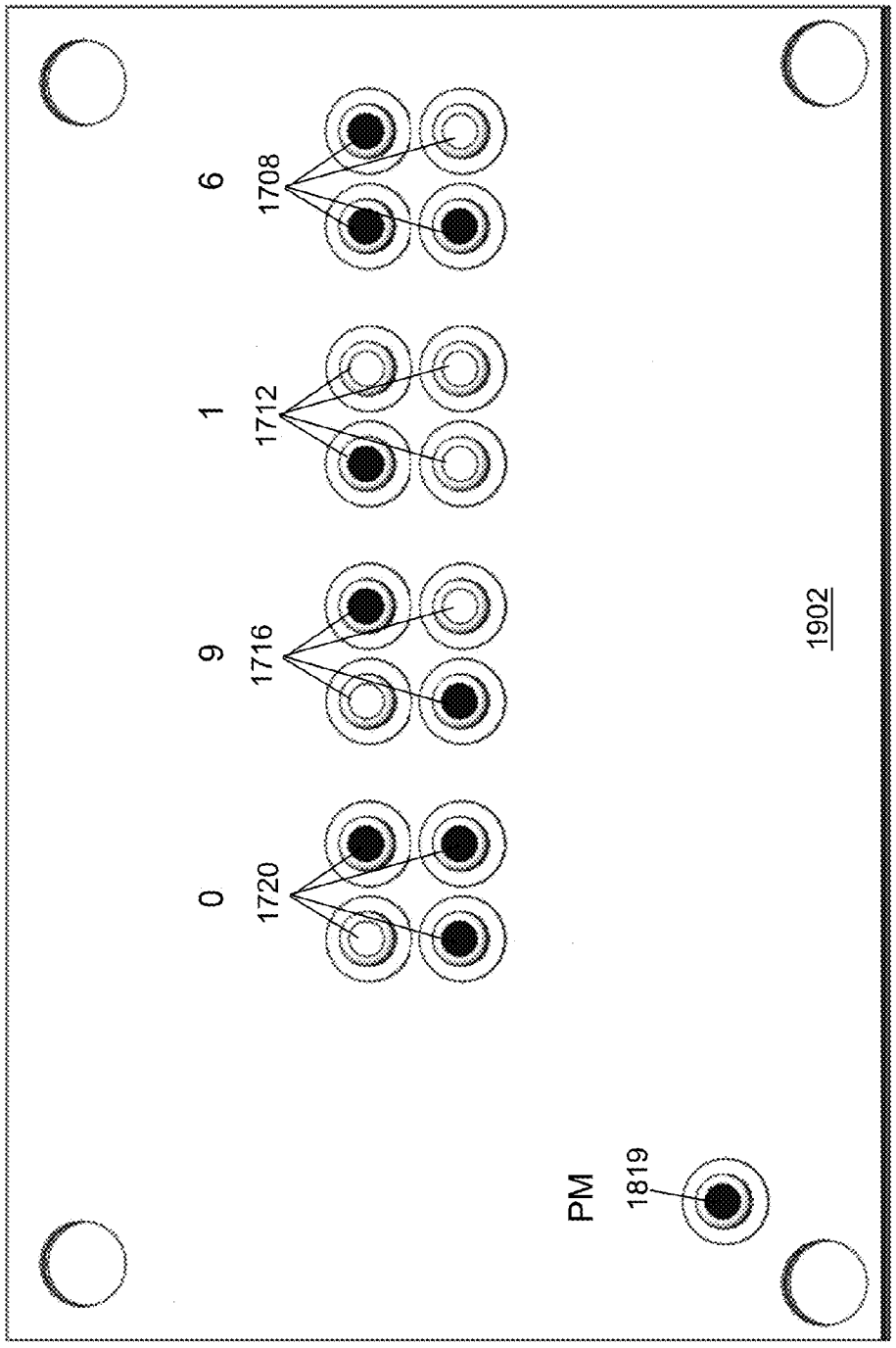

Fig. 19b

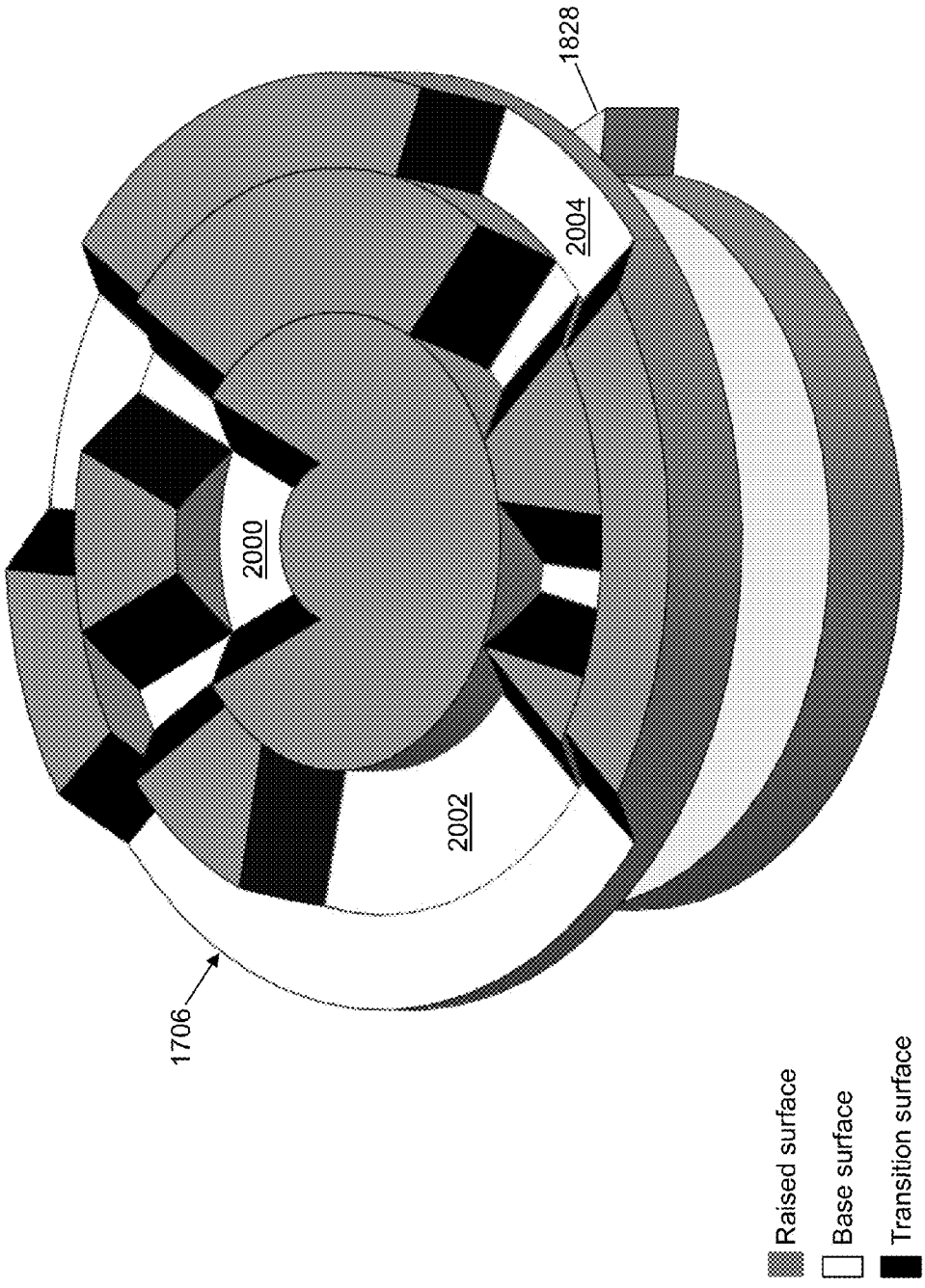
1828
2004
2000
2002
1706
Raised surface
Base surface
Transition surface

Fig. 20a

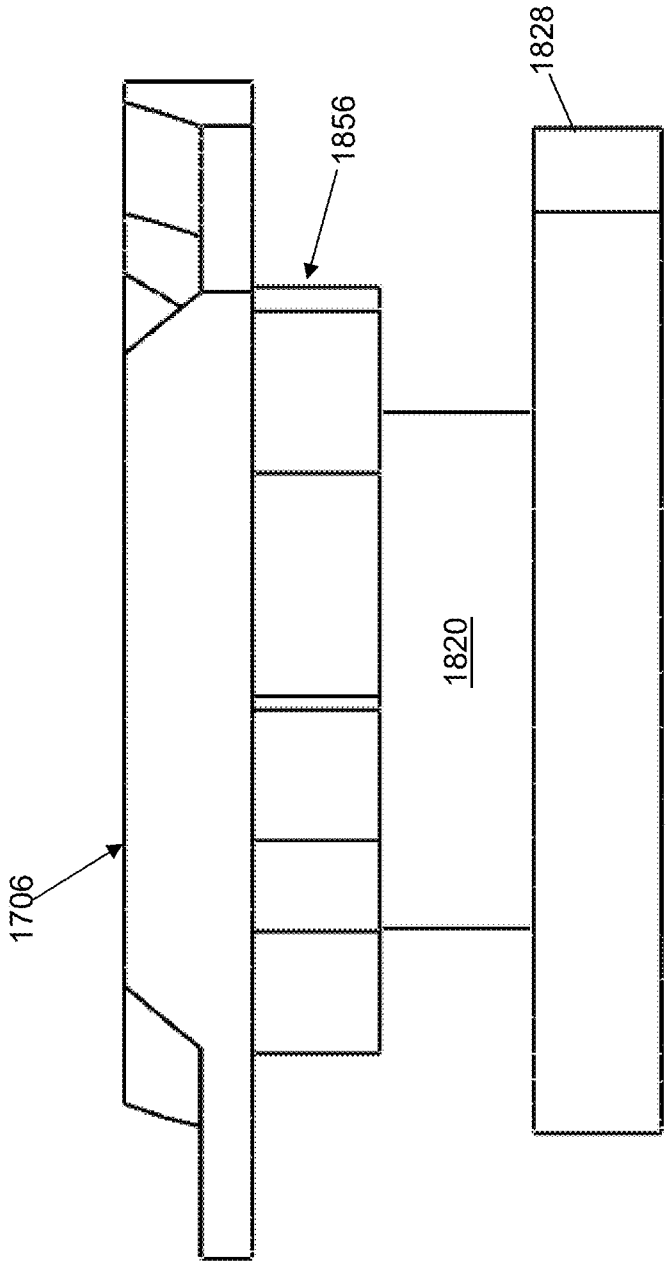

Fig. 20b

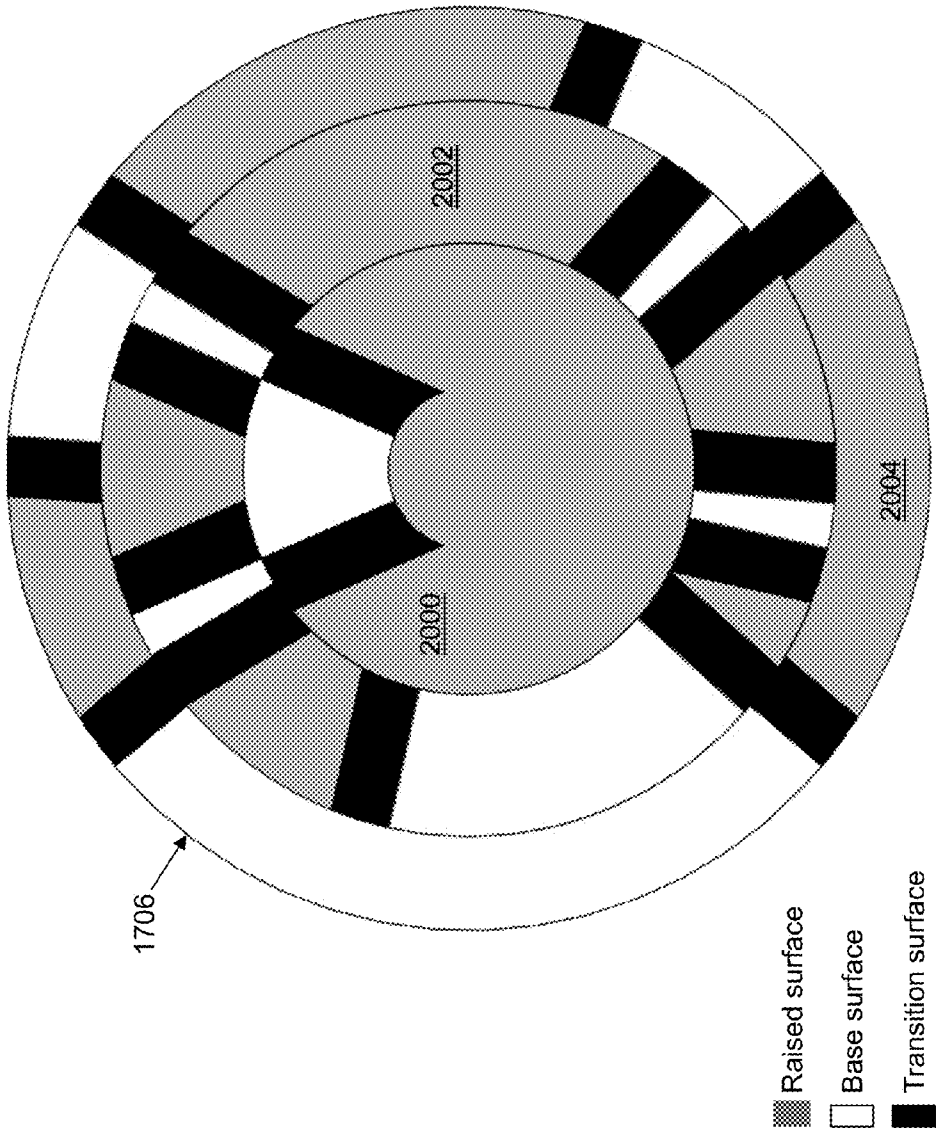
2002
2000
2004
1706
Raised surface
Base surface
Transition surface

Fig. 20c

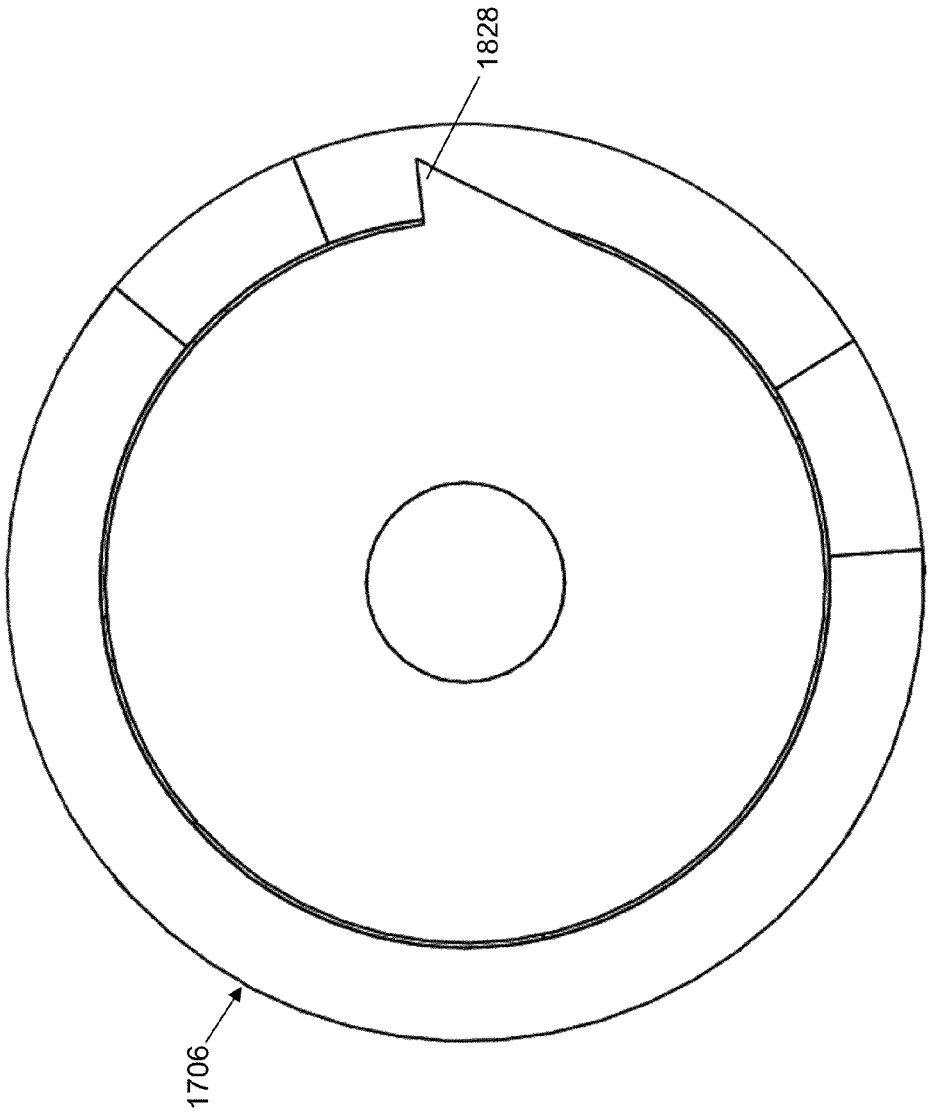

Fig. 20d

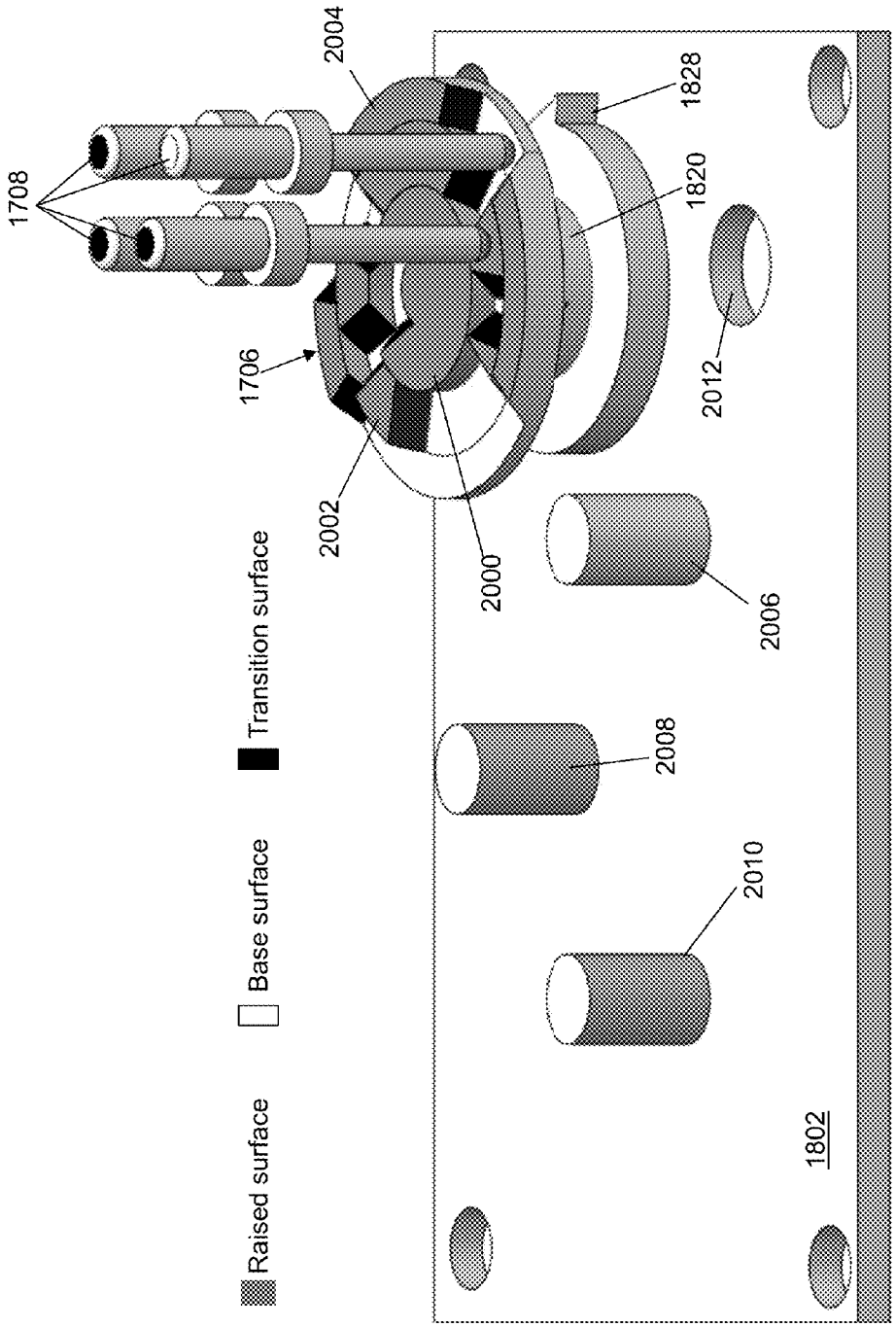
1708
2004
1828
1820
1706
2012
2002
2000
2006
2008
2010
1802
Raised surface
Base surface
Transition surface

Fig. 20e

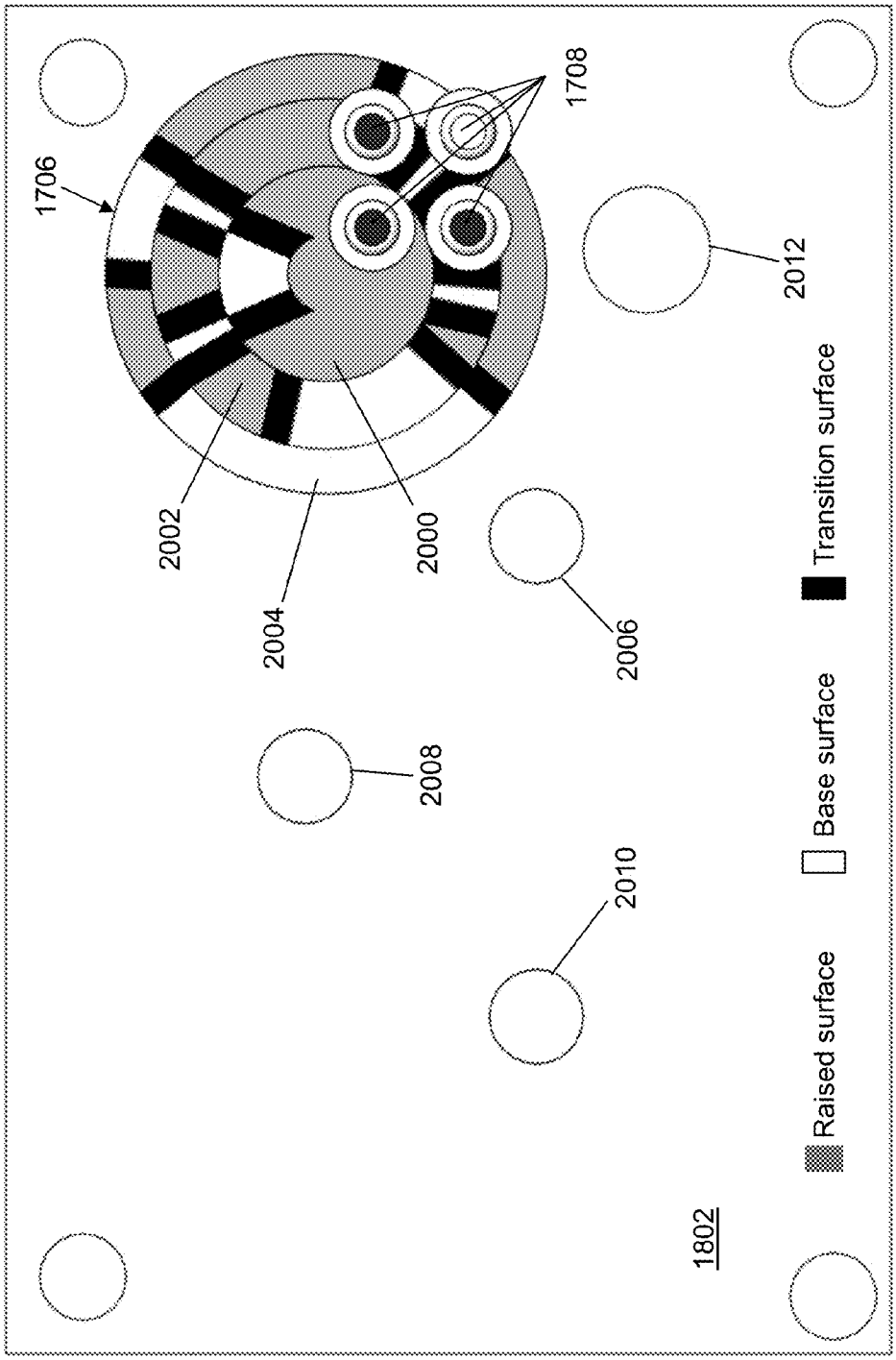
1706
1708
2012
2002
2000
2004
2006
2008
2010
1802
Raised surface
Base surface
Transition surface

Fig. 20f

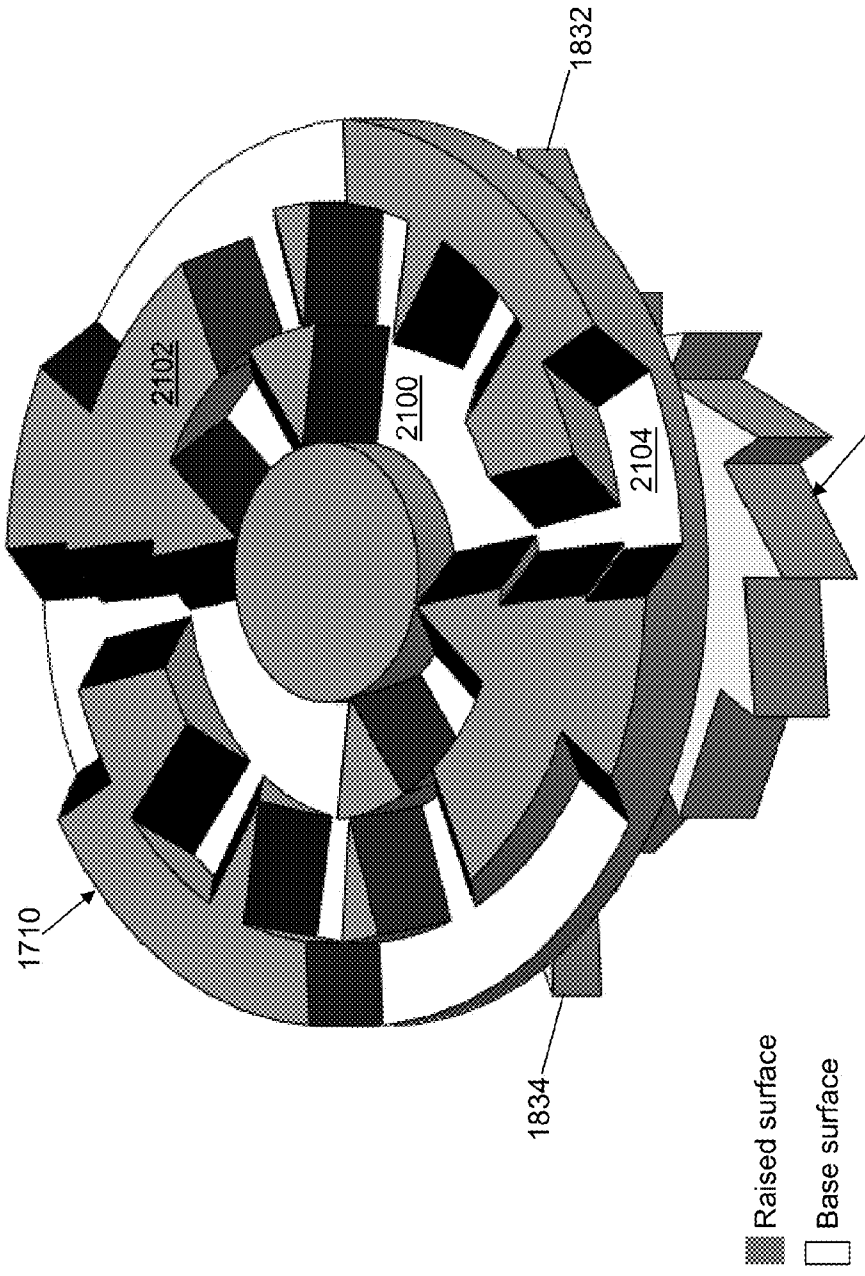
1832
2102
2100
2104
1830
1710
1834
Raised surface
Base surface
Transition surface

Fig. 21a

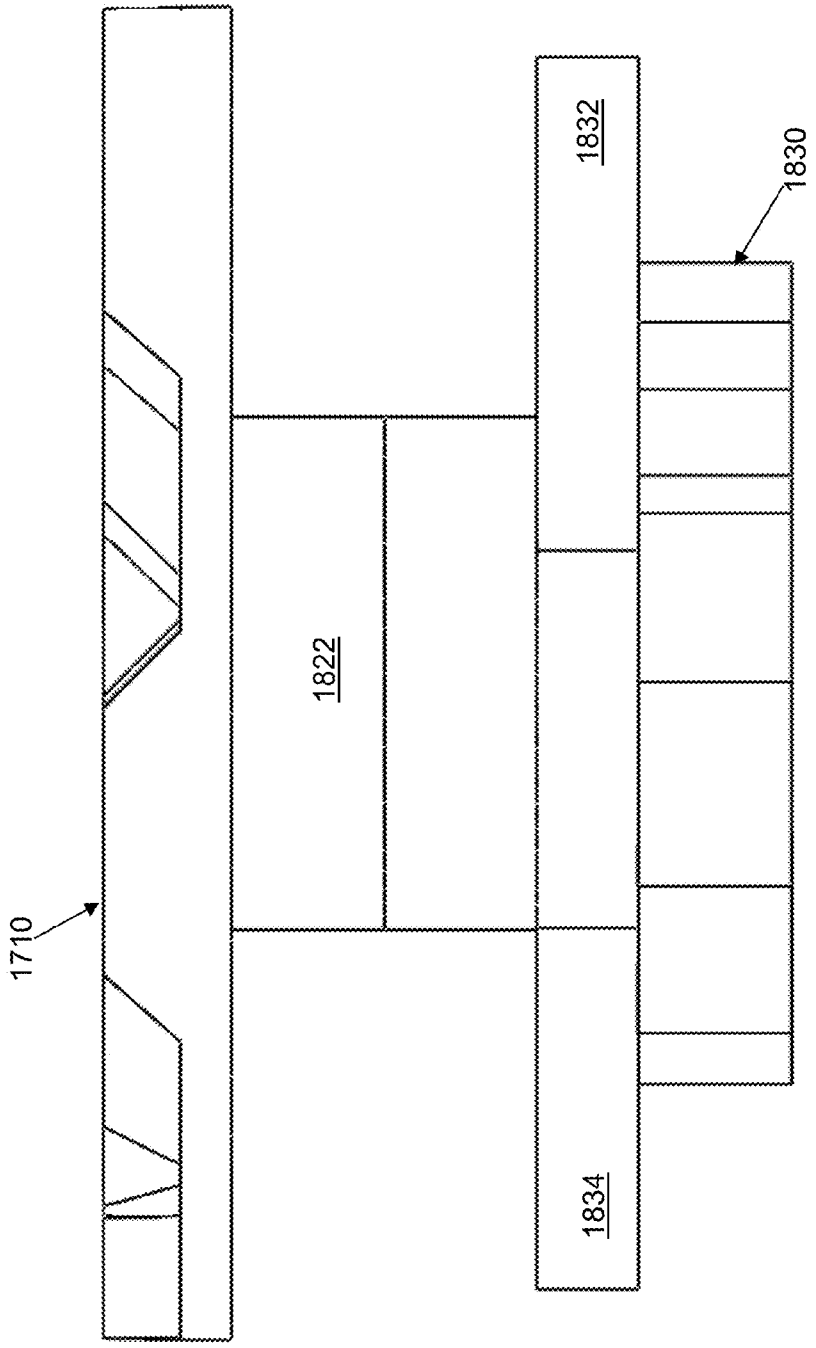

Fig. 21b

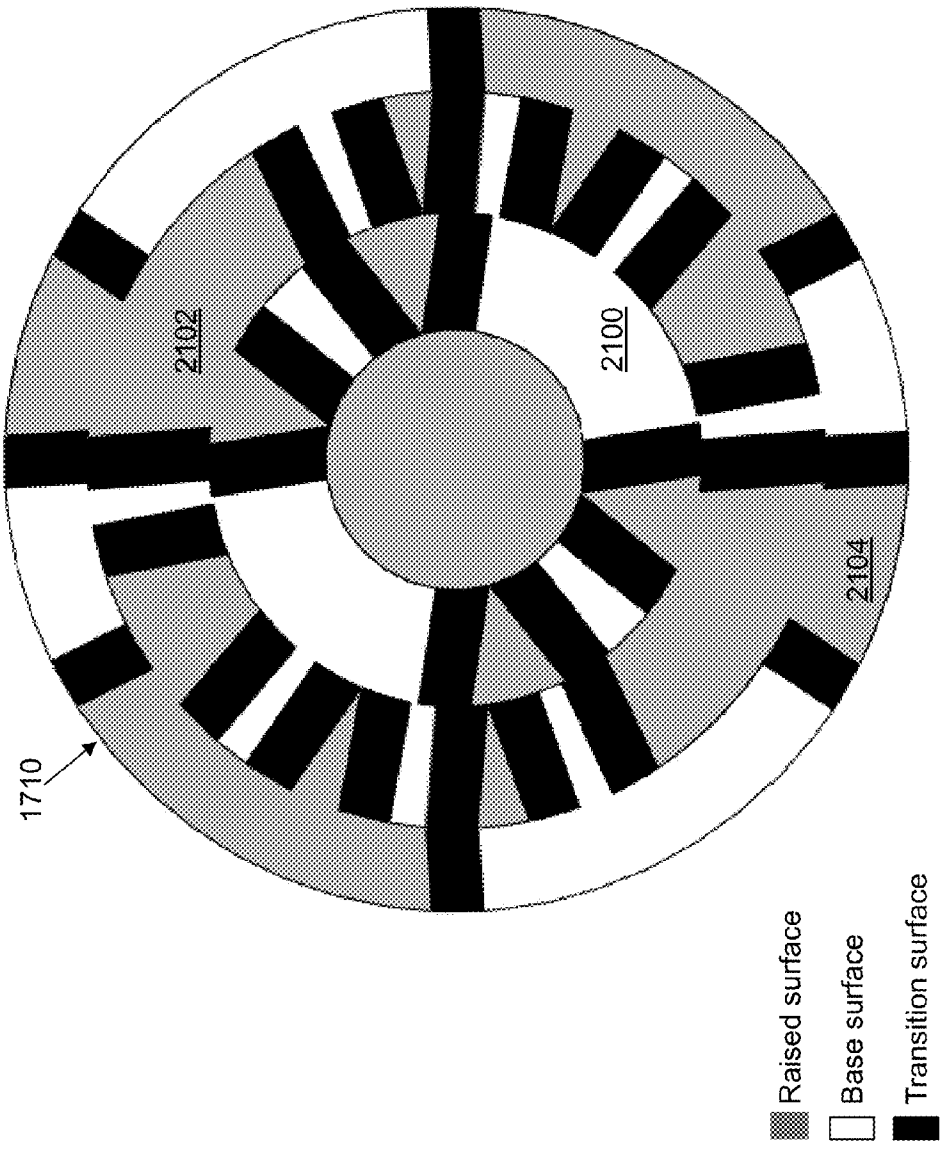
1710
2102
2100
2104
Raised surface
Base surface
Transition surface

Fig. 21c

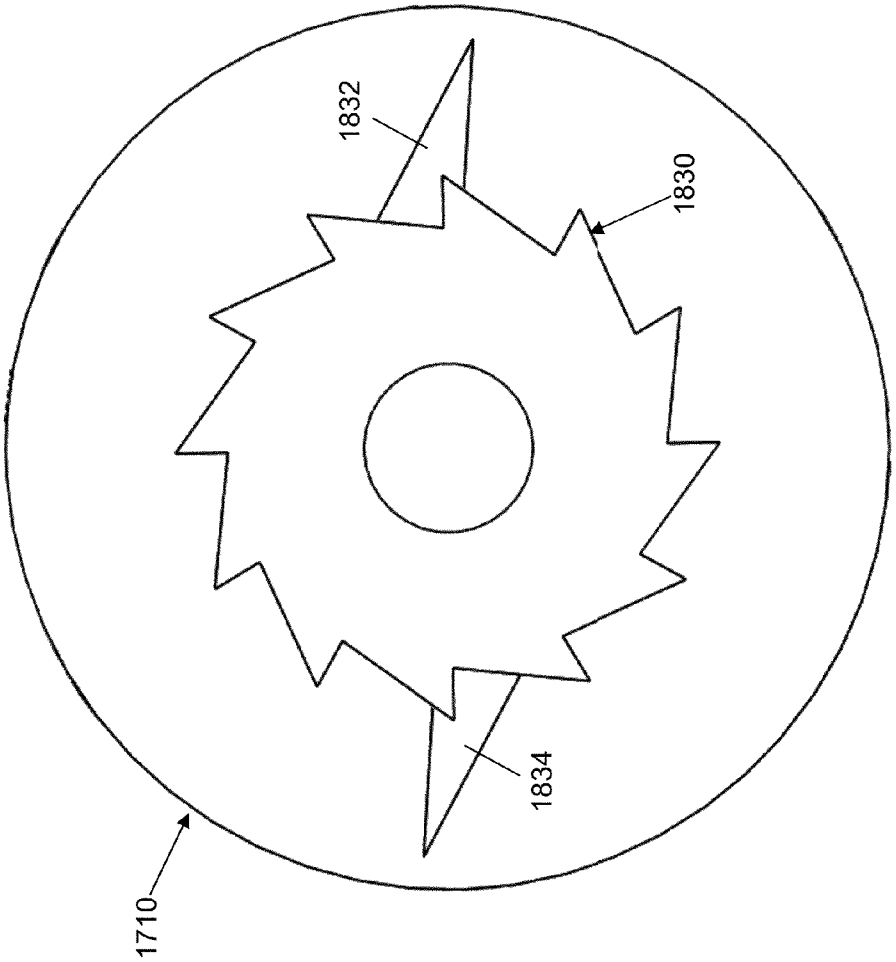

Fig. 21d

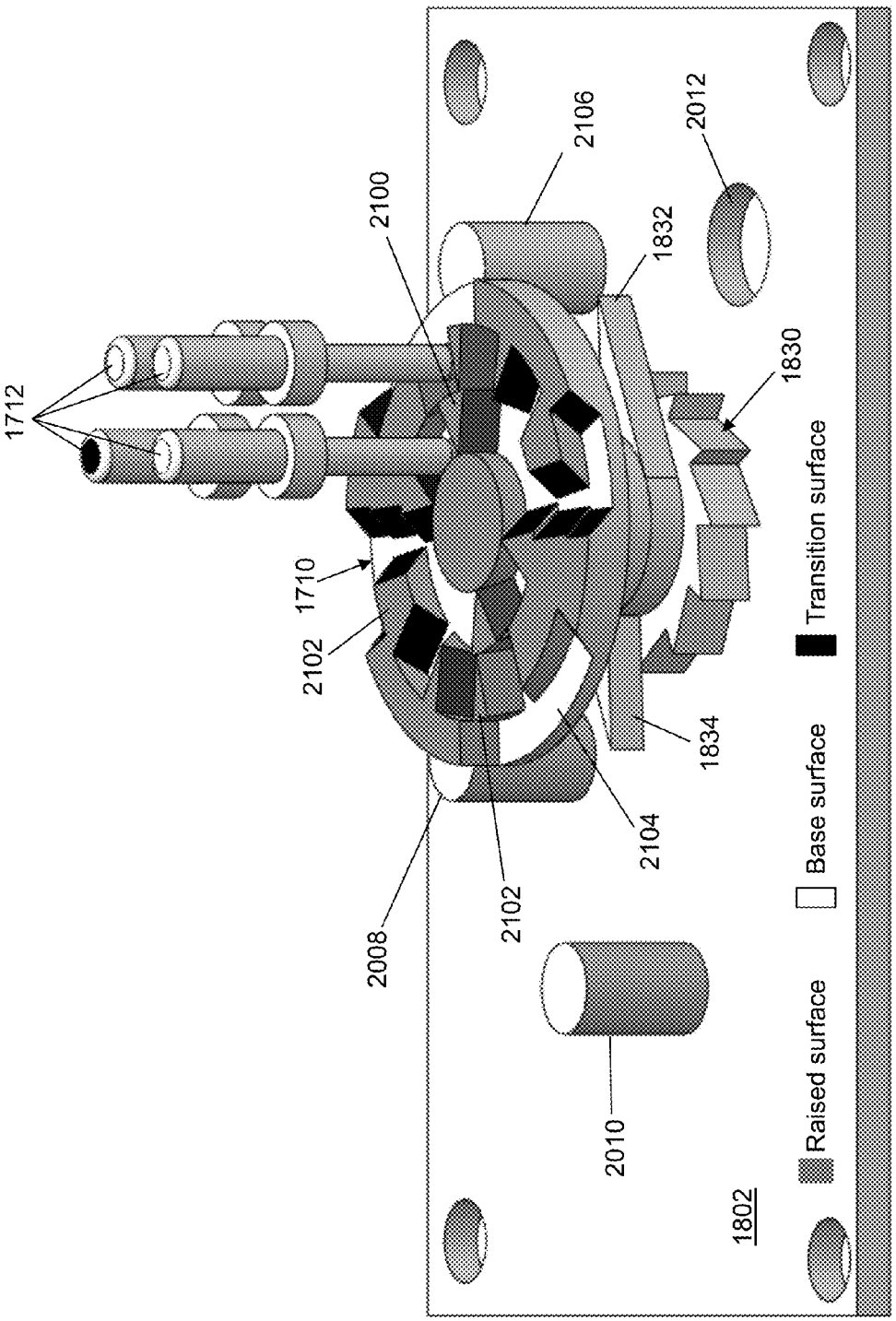
1712
2100
2106
2012
1832
1830
1710
2102
1834
2104
2102
2008
2010
1802
Raised surface
Base surface
Transition surface

Fig. 21e

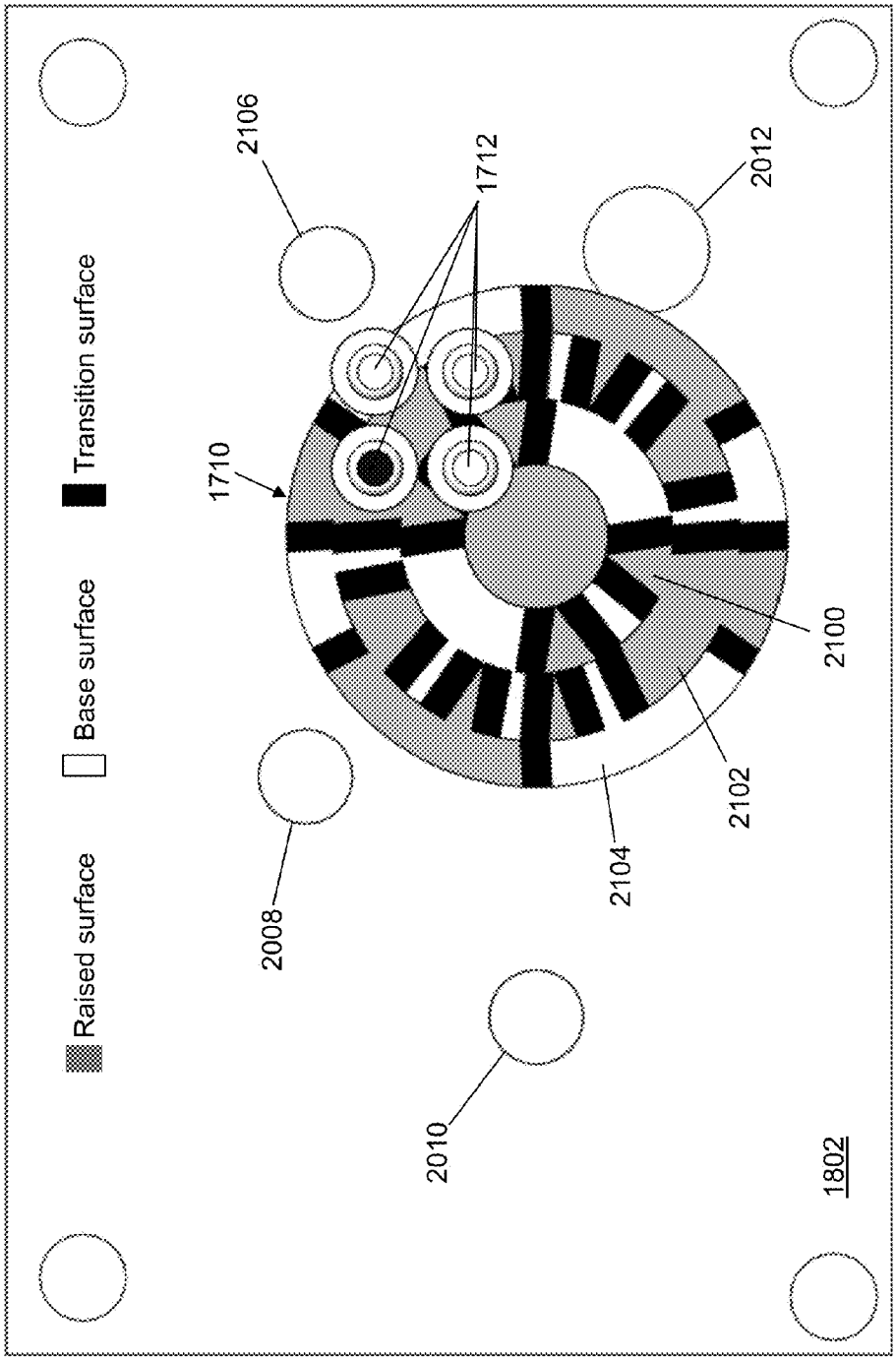
Raised surface
Base surface
Transition surface
2106
1712
2012
1710
2100
2102
2104
2008
2010
1802

Fig. 21f

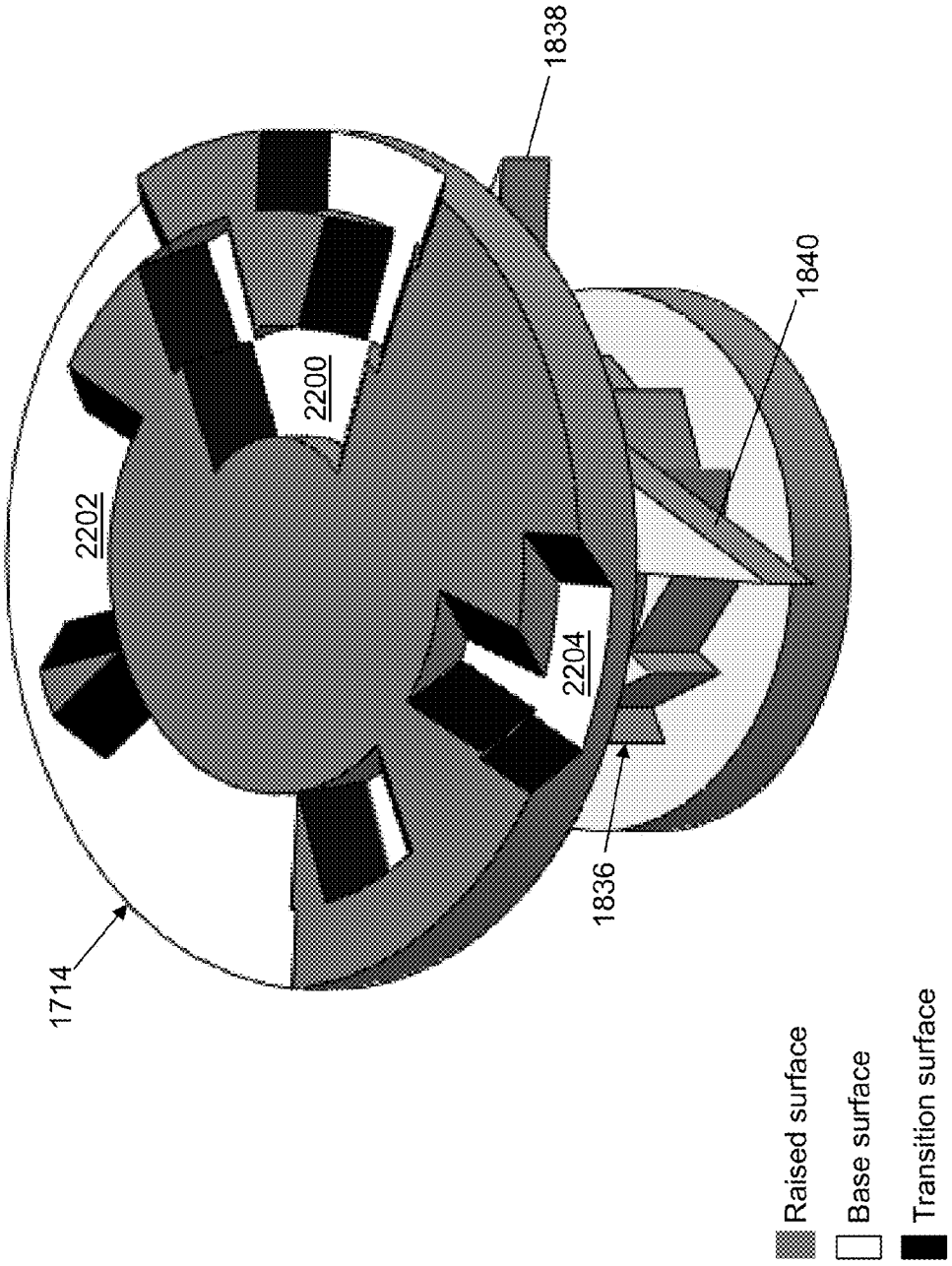
1838
1840
2200
2202
2204
1836
1714
Raised surface
Base surface
Transition surface

Fig. 22a

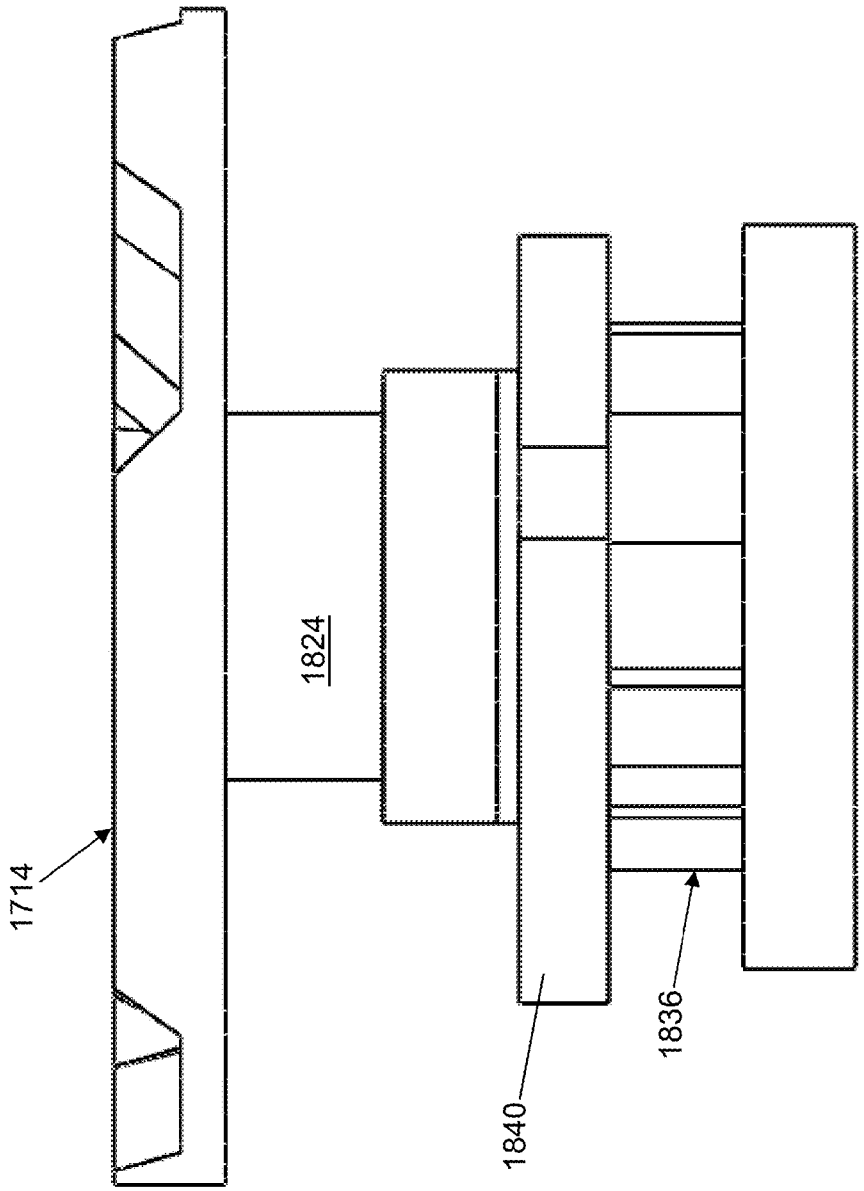

Fig. 22b

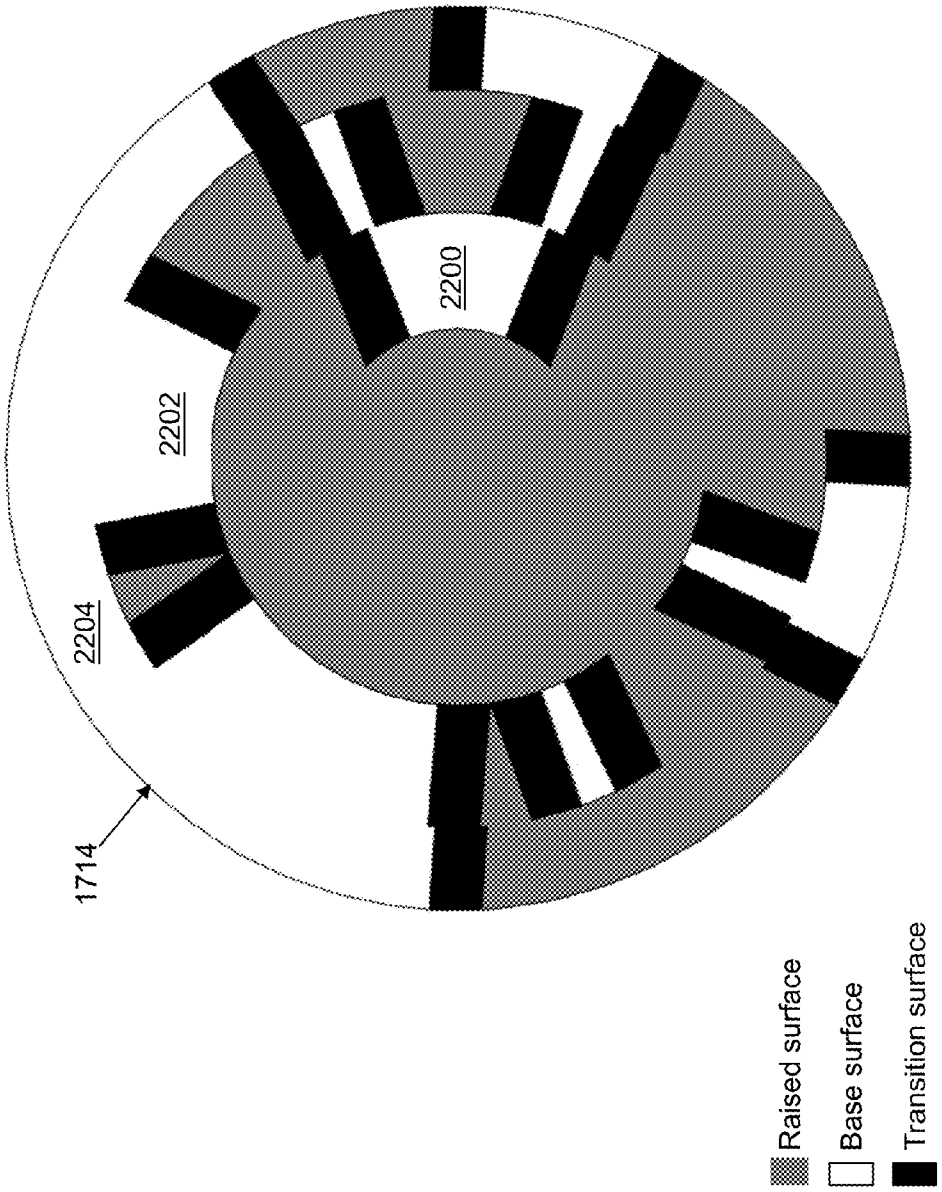
1714
2204
2202
2200
Raised surface
Base surface
Transition surface

Fig. 22c

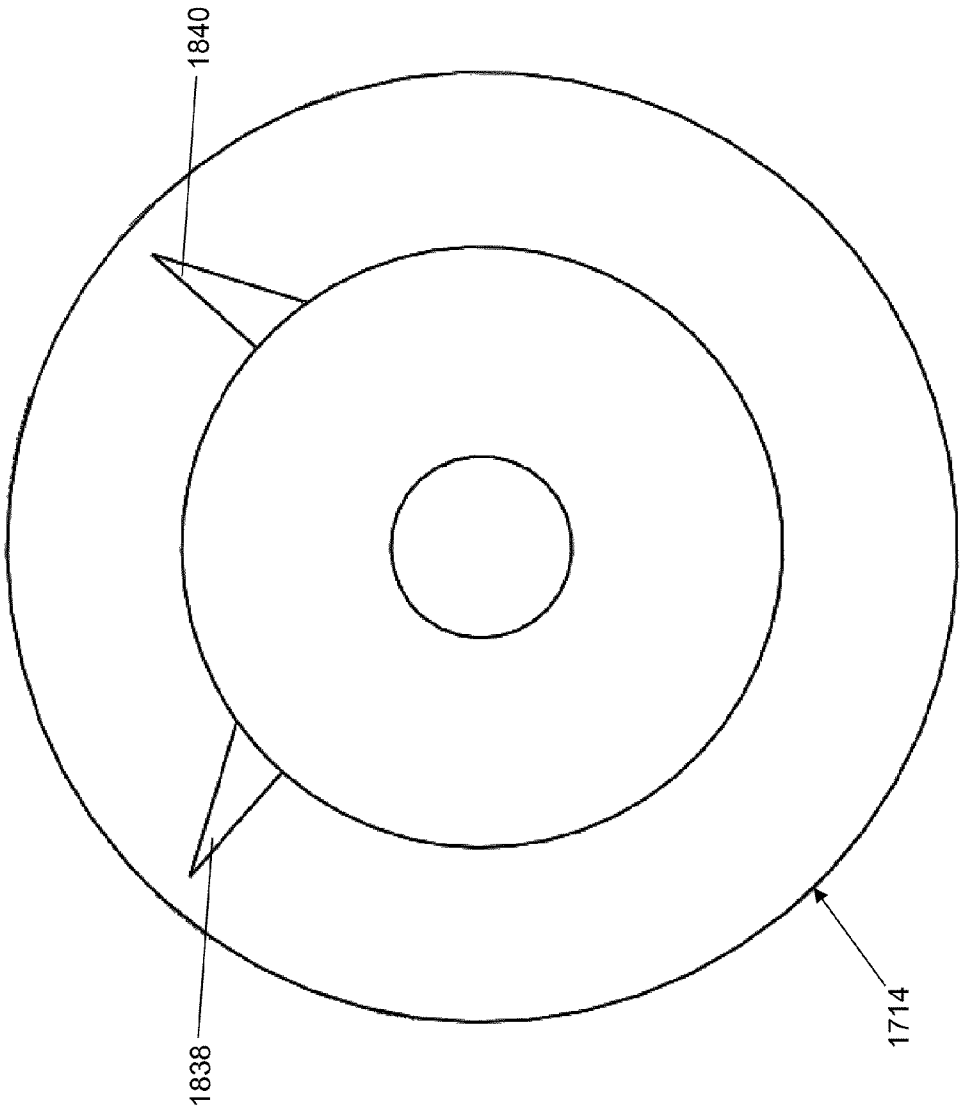

Fig. 22d

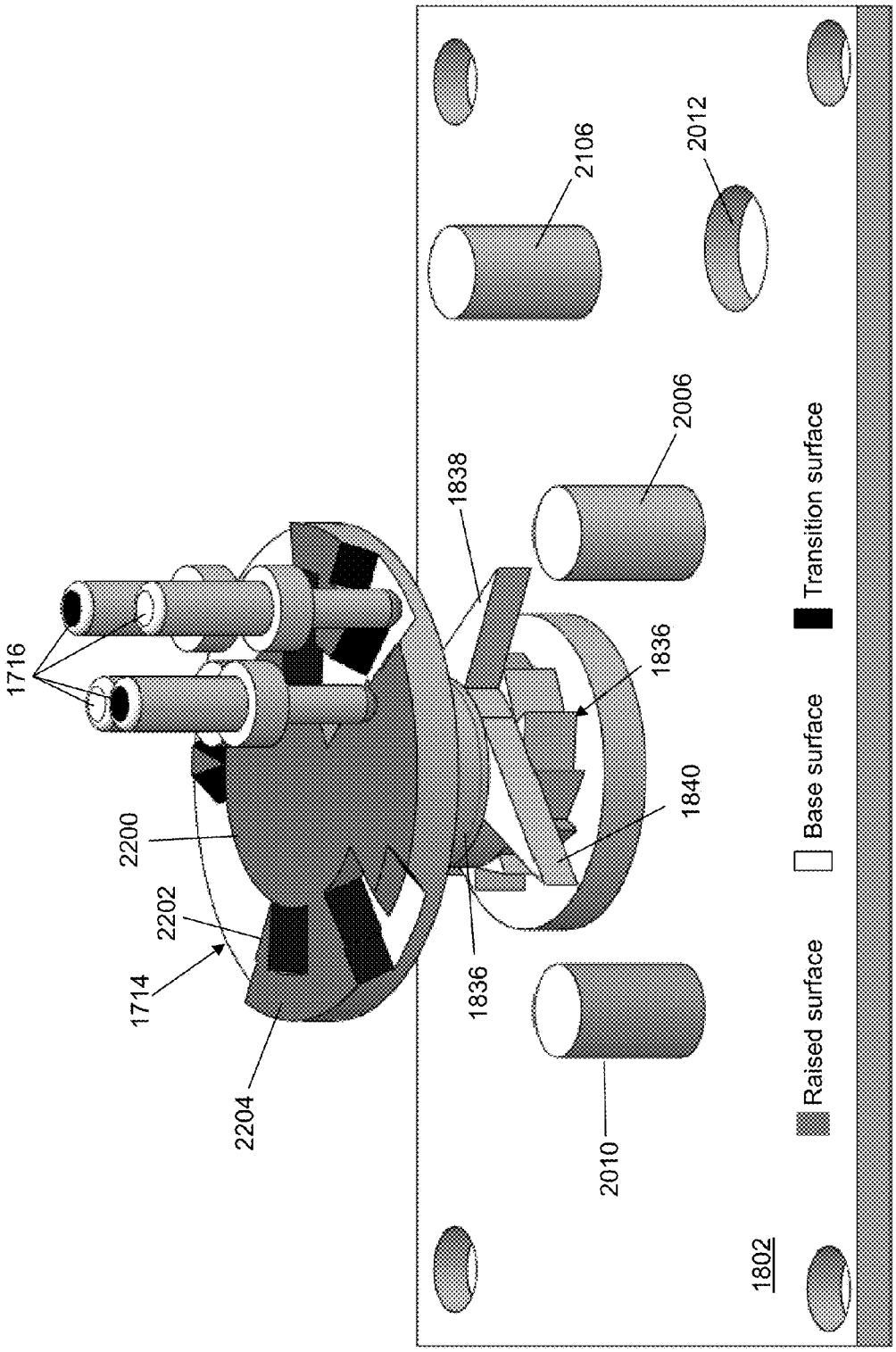
1716
2200
2202
1714
2204
1838
1836
1840
1836
2106
2012
2006
2010
1802
Raised surface
Base surface
Transition surface

Fig. 22e

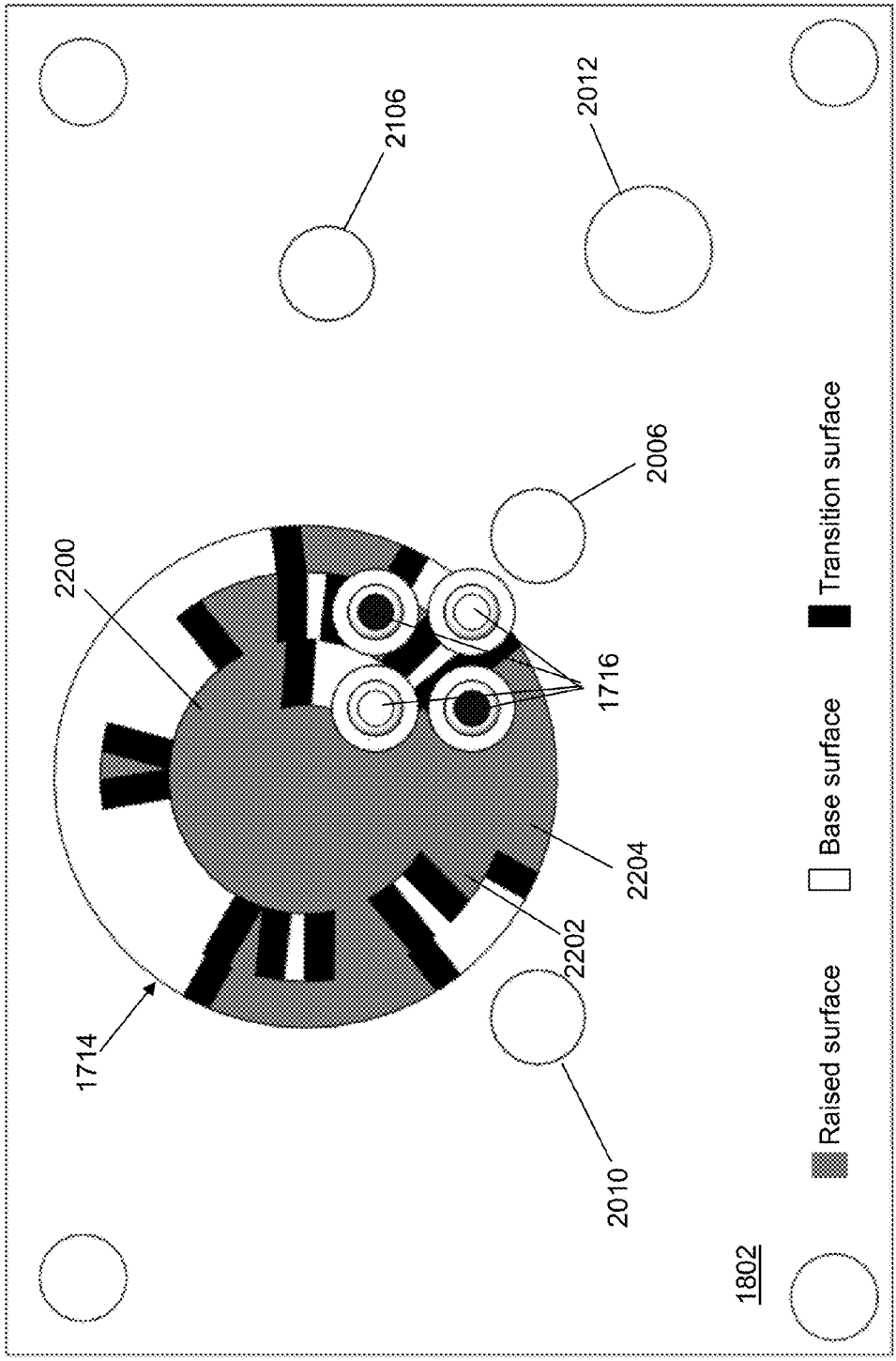
2106
2012
2006
2200
1716
2204
2202
1714
2010
1802
Raised surface
Base surface
Transition surface

Fig. 22f

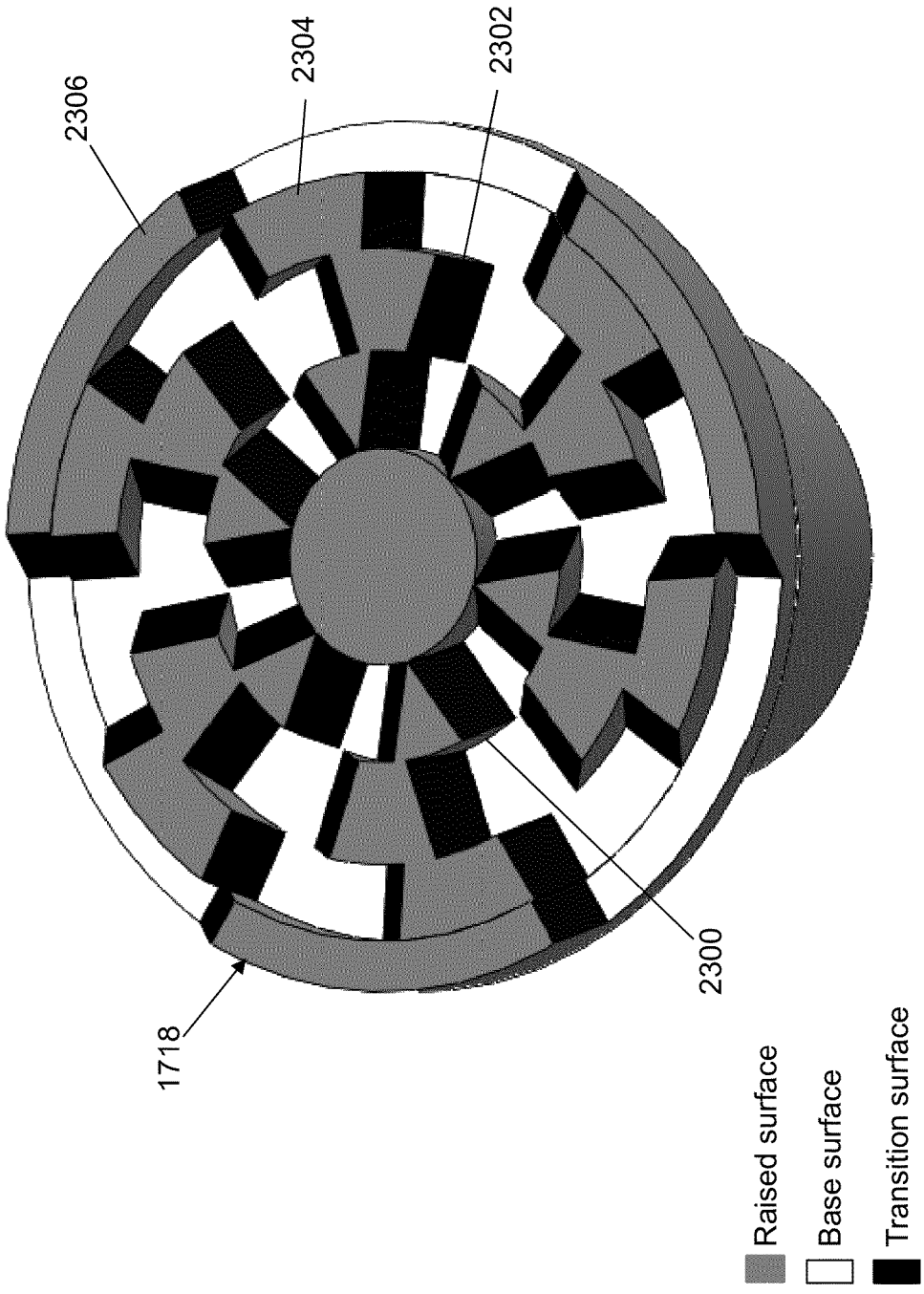
2306
2304
2302
2300
1718
Raised surface
Base surface
Transition surface

Fig. 23a

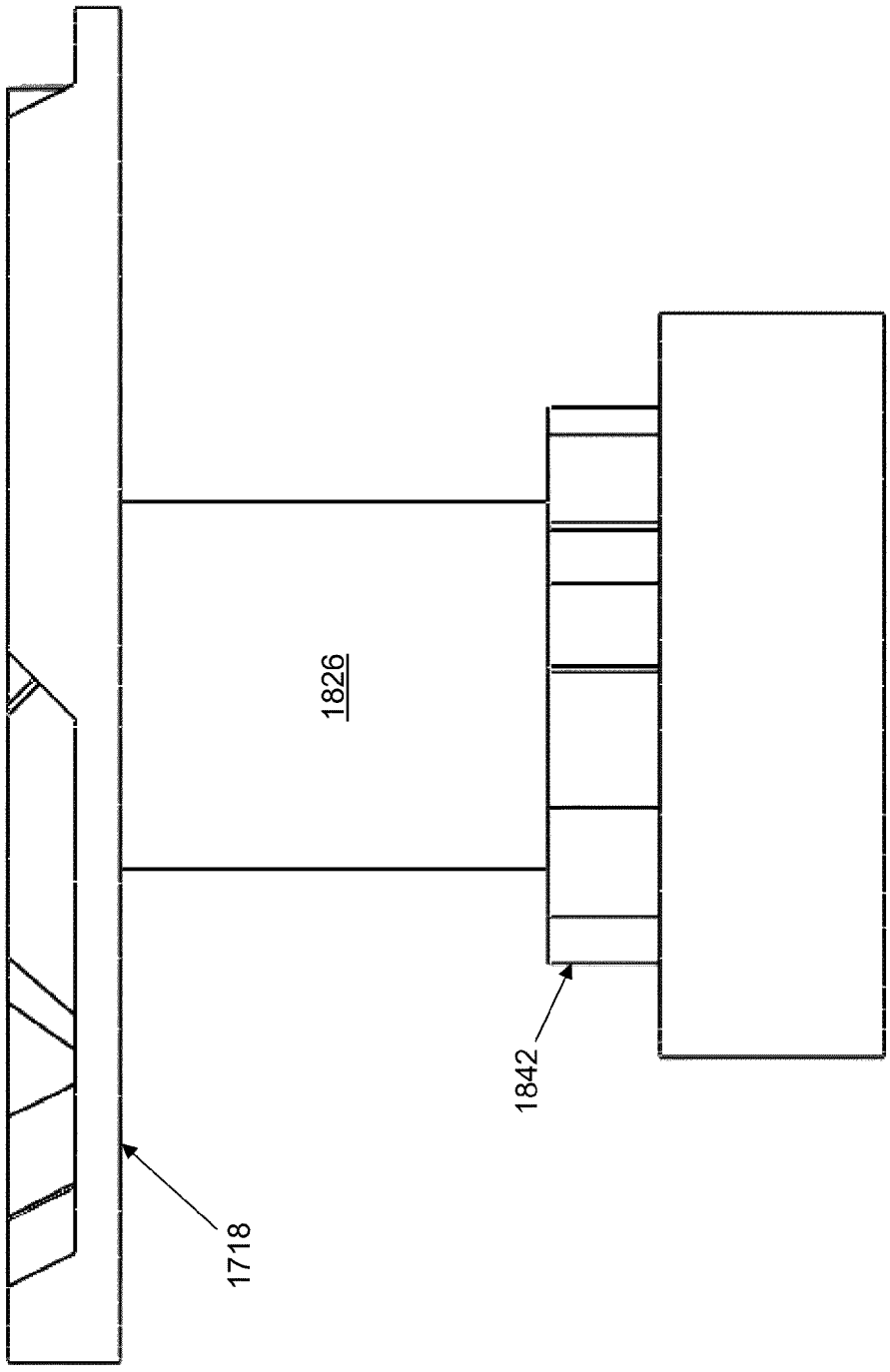

Fig. 23b

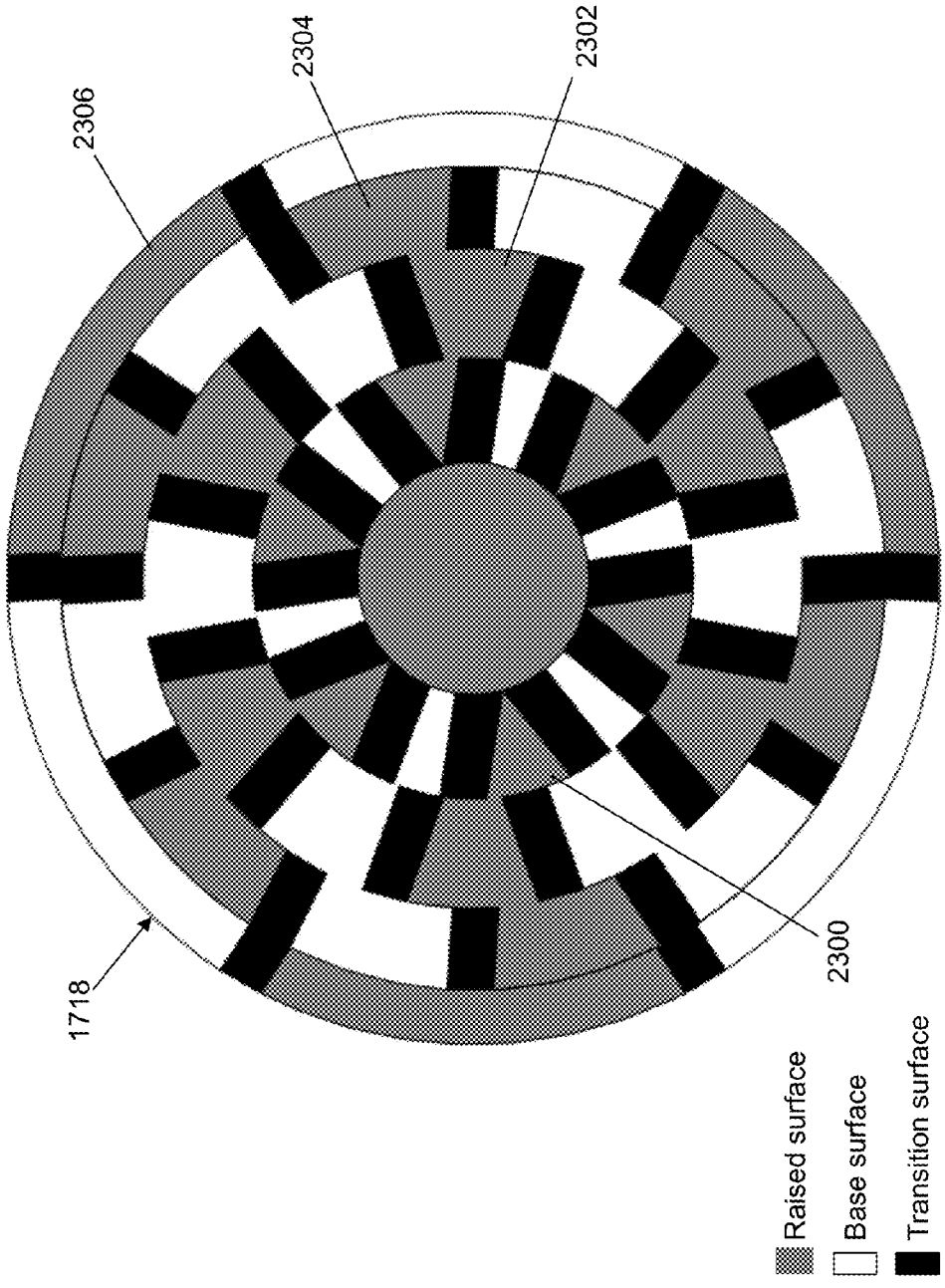
2306
2304
2302
1718
2300
Raised surface
Base surface
Transition surface

Fig. 23c

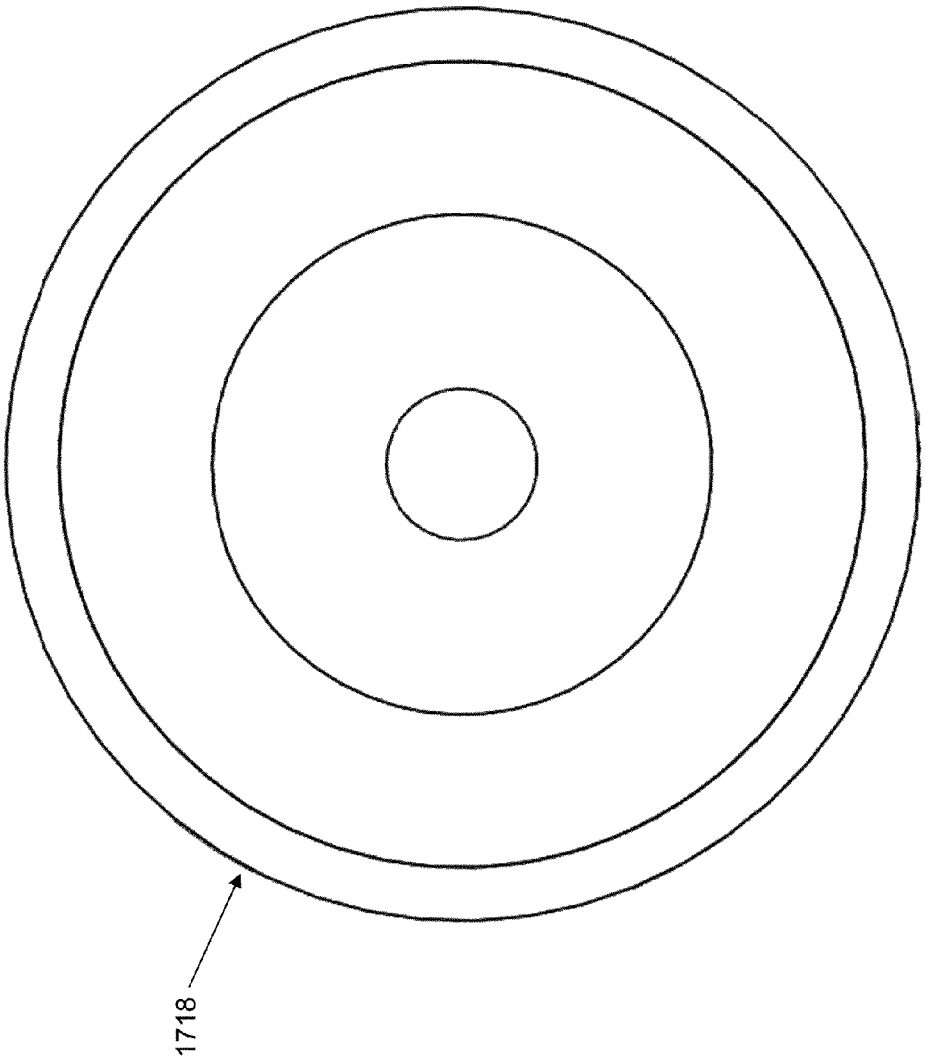

Fig. 23d

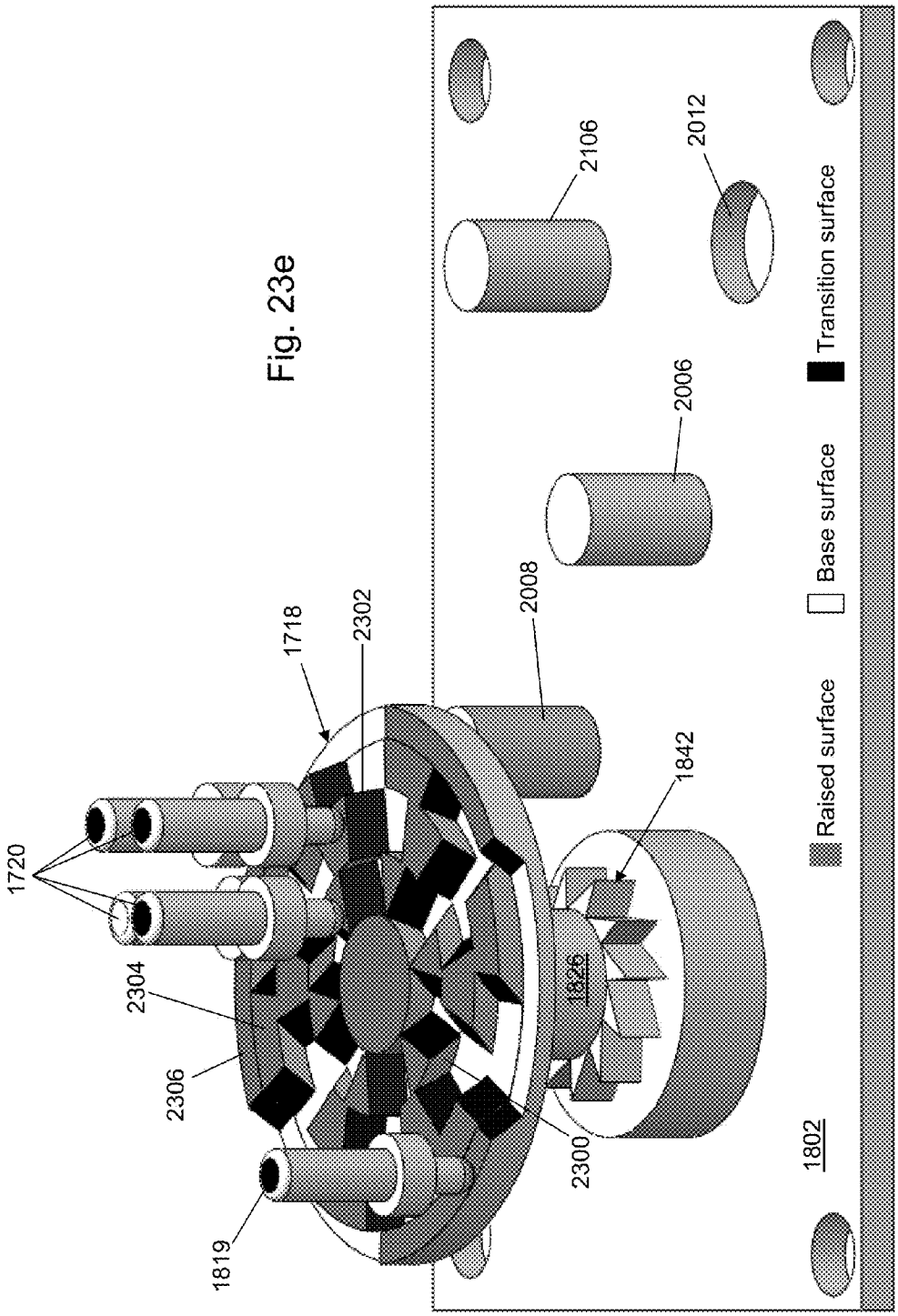
1720
1718
2302
2304
2306
1819
2300
1826
1842
2008
2006
2106
2012
1802
Raised surface
Base surface
Transition surface

Fig. 23e

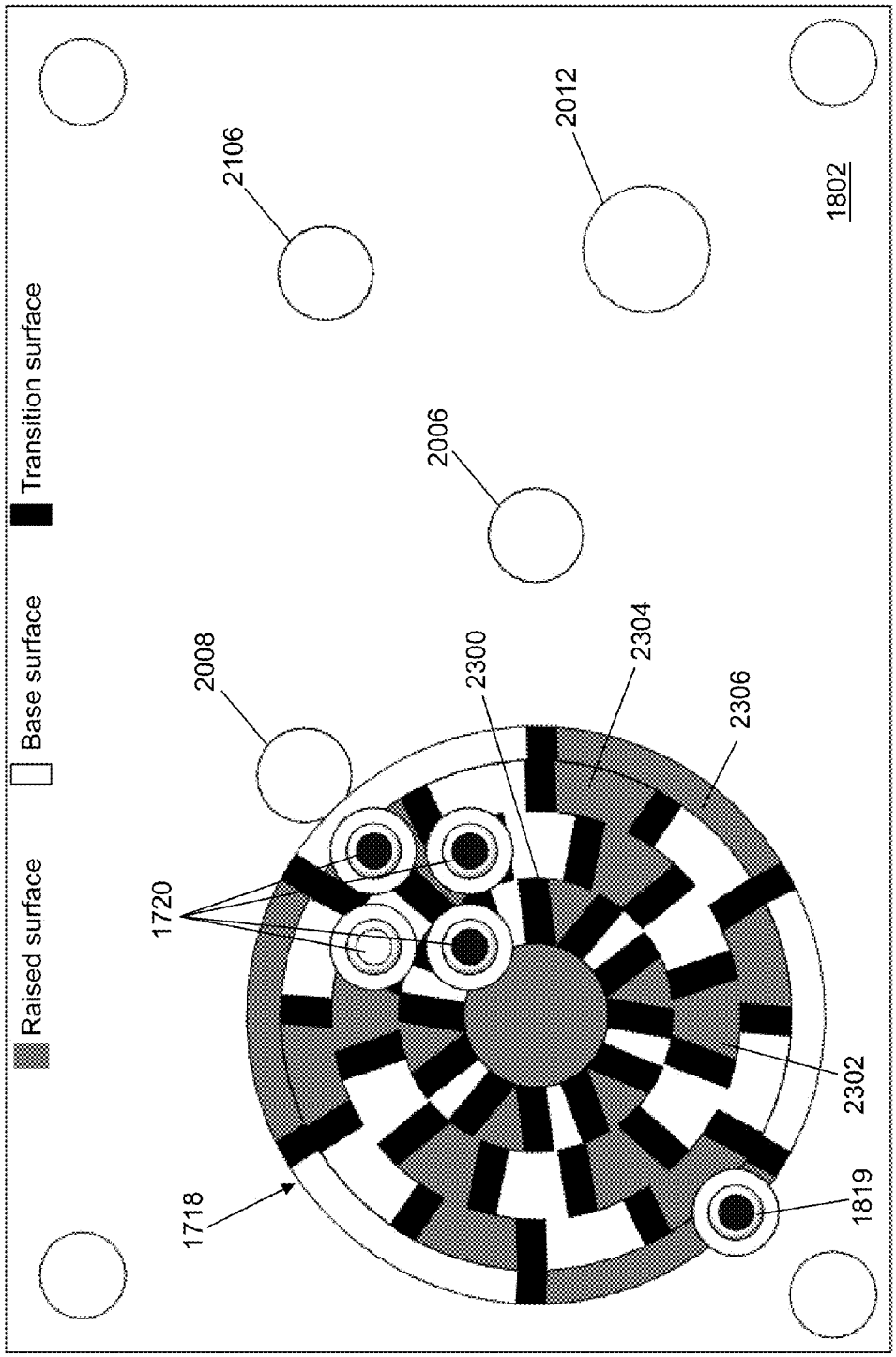
Raised surface
Base surface
Transition surface
2106
2012
1802
2006
2008
2300
2304
2306
1720
2302
1718
1819

Fig. 23f

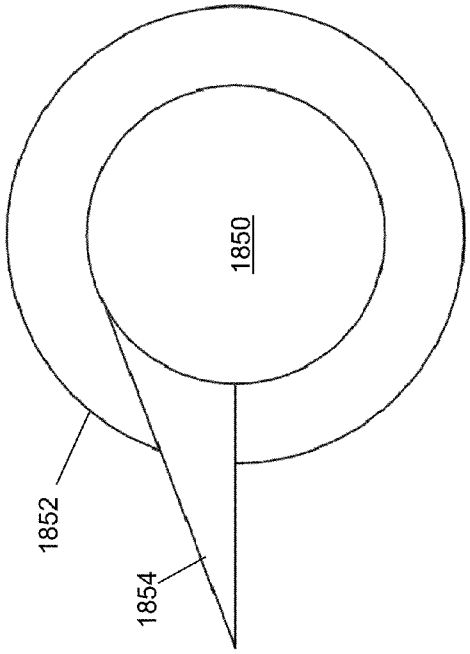

Fig. 24b

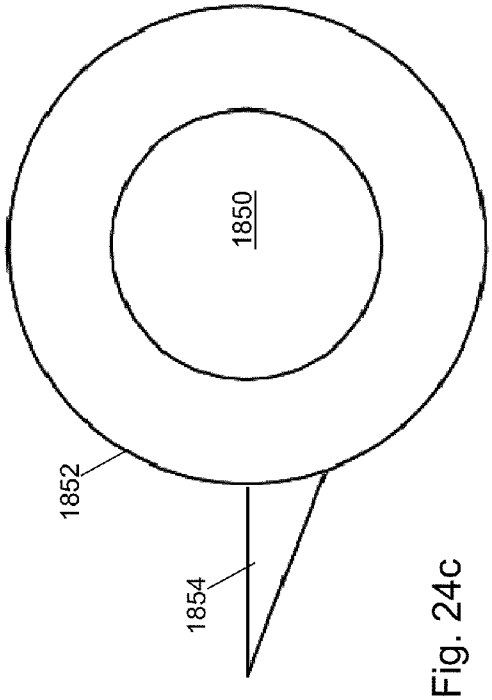

Fig. 24c

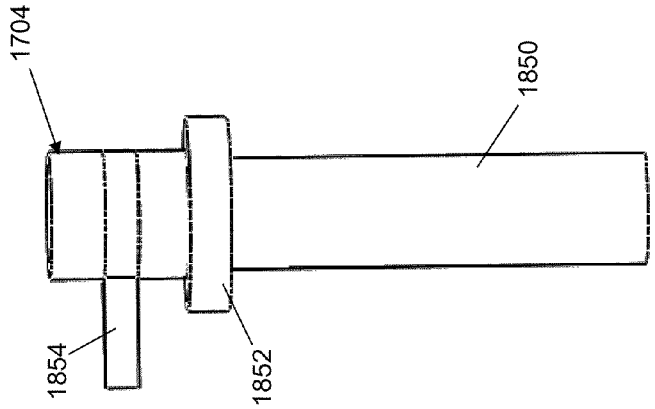

Fig. 24a

BRAILLE WATCH

BACKGROUND

The Braille language is the universally accepted form of written communication for the visually impaired. It utilizes a system of dots arrayed in a three row by two column grid. Raised dots are located in any combination of the six positions in the grid, to display different letters, numbers, and symbols based on the configuration of the raised dots. Worldwide, the Braille system provides millions of visually impaired individuals with a method for reading and writing.

For this method of communication to be accurate and precise, universal specifications have been developed. Each dot has a base diameter of 1.44 millimeters (0.057 in.) while being 0.48 millimeters (0.019 in.) in height. Within each individual grid, the dots are 2.34 millimeters (0.092 in.) apart, measured center-to-center, and each individual character is of 6.22 millimeters (0.245 in.) away from the neighboring character.

The distance between two Braille pins is at least 2.34 millimeters apart because this is the minimal distance required to distinguish between two points with the fingertip. This minimal distance is determined by mechanoreceptors located on the skin, which are activated by the slightest deformation of the skin due to contact. To discriminate between two points, there must be a deactivated receptor located between two activated receptors. Without the presence of a deactivated receptor, the brain would perceive the contact of the two points as one stimulus.

No device yet exists that allows the visually impaired to read the time in Braille. To tell time, the visually impaired currently rely on either talking or tactile watches. Talking watches function by verbally relaying the time to the user whenever the user presses a button. This method is effective in communicating the time; however, it can be disruptive to others and draws attention to the user. Tactile watches, on the other hand, are silent. They function much like traditional analog watches, except the user touches the face of the watch to feel where the hands are located. There are also raised markings on the tactile watch that indicate the positions of the numbers; however, there is no standard format for these markings and they vary from product to product. Tactile watches can be difficult to read. Also, the hands of tactile watches are exposed while the user is telling the time, and therefore they can be easily broken or damaged. Thus, talking watches are disruptive, while tactile watches are difficult to read and fragile.

SUMMARY

In an example embodiment, a Braille watch is provided. The Braille watch includes a first disk, a first plurality of pins, a top plate, and an actuator. The first disk includes a first raised surface. The first plurality of pins includes a first pin, a second pin, a third pin, and a fourth pin. The top plate includes a first hole, a second hole, a third hole, and a fourth hole, wherein the first pin is mounted to slide within the first hole, the second pin is mounted to slide within the second hole, the third pin is mounted to slide within the third hole, and the fourth pin is mounted to slide within the fourth hole. The first pin is mounted above the first disk to extend above a top surface of the top plate when a portion of the first raised surface is positioned below the first pin. The second pin is mounted above the first disk to extend above the top surface of the top plate when a second portion of the first raised surface is positioned below the second pin. The third pin is mounted above the first disk to extend above the top surface of the top plate when a third portion of the first raised surface is positioned below the third pin. The fourth pin is mounted above the first disk to extend above the top surface of the top plate when a fourth portion of the first raised surface is positioned below the fourth pin. The actuator is mounted to rotate the first disk to form a Braille number with one or more of the first plurality of pins.

Other principal features and advantages of the invention will become apparent to those skilled in the art upon review of the following drawings, the detailed description, and the appended claims.

BRIEF DESCRIPTION OF THE DRAWINGS

Illustrative embodiments of the invention will hereafter be described with reference to the accompanying drawings, wherein like numerals denote like elements.

FIG. **1** depicts a block diagram of a Braille watch in accordance with a first illustrative embodiment.

FIG. **2** depicts the Braille symbols for the numbers 0-9.

FIGS. **3***a* and **3***b* depict disk and pin configurations to form the numbers 4 and 5, respectively, using Braille symbols in accordance with the first illustrative embodiment.

FIG. **4** is a top perspective view of the disk of FIGS. **3***a* and **3***b* in accordance with the first illustrative embodiment.

FIG. **5** is a top view of the disk of FIG. **4** in accordance with the first illustrative embodiment.

FIG. **6** is a side view of the disk of FIG. **4** in accordance with the first illustrative embodiment.

FIG. **7** is a side view of a disk and pin assembly showing a first pin in a raised position and a second pin in a lowered position in accordance with an illustrative embodiment.

FIGS. **8***a*, **8***b*, and **8***c* show a side perspective view, a top view, and a side view, respectively, of four disk and pin assemblies arranged to indicate the Braille number "1158" in accordance with the first illustrative embodiment.

FIG. **9** depicts a block diagram of a Braille watch in accordance with a second illustrative embodiment.

FIG. **10** depicts a disk for use in the Braille watch of FIG. **9** and indicates an arrangement of three rings and four pin locations use to form each Braille number 0-9 by rotating the disk in accordance with the second illustrative embodiment.

FIG. **11** depicts a gear arm and gear teeth for use in the Braille watch of FIG. **9** in accordance with the second illustrative embodiment.

FIGS. **12***a*, **12***b*, **12***c*, and **12***d* show a front perspective view, a top back perspective view, a top view, and a front side view, respectively, of four disk and pin assemblies arranged to indicate the Braille number "0754" and "PM" in accordance with the second illustrative embodiment.

FIGS. **13***a*, **13***b*, **13***c*, and **13***d* show a perspective view, a side view, a top view, and a bottom view, respectively, of a first disk of the four disk and pin assemblies of FIG. **9** in accordance with the second illustrative embodiment.

FIGS. **14***a*, **14***b*, **14***c*, and **14***d* show a perspective view, a side view, a top view, and a bottom view, respectively, of a second disk of the four disk and pin assemblies of FIG. **9** in accordance with the second illustrative embodiment.

FIGS. **15***a*, **15***b*, **15***c*, and **15***d* show a perspective view, a side view, a top view, and a bottom view, respectively, of a third disk of the four disk and pin assemblies of FIG. **9** in accordance with the second illustrative embodiment.

FIGS. **16***a*, **16***b*, **16***c*, and **16***d* show a perspective view, a side view, a top view, and a bottom view, respectively, of a fourth disk of the four disk and pin assemblies of FIG. **9** in accordance with the second illustrative embodiment.

FIG. **17** depicts a block diagram of a Braille watch in accordance with a third illustrative embodiment.

FIGS. **18***a*, **18***b*, **18***c*, and **18***d* show a front perspective view, a top view, a right side perspective view, and a front side view, respectively, of four disk and pin assemblies arranged to indicate the Braille number "0916" and "PM" in accordance with the third illustrative embodiment.

FIG. **18***e* shows a front perspective view of a gearing mechanism of the four disk and pin assemblies of FIGS. **18***a*, **18***b*, **18***c*, and **18***d* in accordance with the third illustrative embodiment.

FIGS. **19***a* and **19***b* show a front perspective view and a top view, respectively, of a Braille watch assembly arranged to indicate the Braille number "0916" in accordance with the third illustrative embodiment.

FIGS. **20***a*, **20***b*, **20***c*, and **20***d* show a perspective view, a side view, a top view, and a bottom view, respectively, of a first disk of the four disk and pin assemblies of FIG. **17** in accordance with the third illustrative embodiment.

FIGS. **20***e* and **20***f* show a front perspective view and a top view of the first disk of FIGS. **20***a*, **20***b*, **20***c*, and **20***d* mounted on the Braille watch assembly of FIGS. **19***a* and **19***b* and rotated to indicate the Braille number "6" in accordance with the third illustrative embodiment.

FIGS. **21***a*, **21***b*, **21***c*, and **21***d* show a perspective view, a side view, a top view, and a bottom view, respectively, of a second disk of the four disk and pin assemblies of FIG. **17** in accordance with the third illustrative embodiment.

FIGS. **21***e* and **21***f* show a front perspective view and a top view of the second disk of FIGS. **21***a*, **21***b*, **21***c*, and **21***d* mounted on the Braille watch assembly of FIGS. **19***a* and **19***b* and rotated to indicate the Braille number "1" in accordance with the third illustrative embodiment.

FIGS. **22***a*, **22***b*, **22***c*, and **22***d* show a perspective view, a side view, a top view, and a bottom view, respectively, of a third disk of the four disk and pin assemblies of FIG. **17** in accordance with the third illustrative embodiment.

FIGS. **22***e* and **22***f* show a front perspective view and a top view of the third disk of FIGS. **22***a*, **22***b*, **22***c*, and **22***d* mounted on the Braille watch assembly of FIGS. **19***a* and **19***b* and rotated to indicate the Braille number "9" in accordance with the third illustrative embodiment.

FIGS. **23***a*, **23***b*, **23***c*, and **23***d* show a perspective view, a side view, a top view, and a bottom view, respectively, of a fourth disk of the four disk and pin assemblies of FIG. **17** in accordance with the third illustrative embodiment.

FIGS. **23***e* and **23***f* show a front perspective view and a top view of the fourth disk of FIGS. **23***a*, **23***b*, **23***c*, and **23***d* mounted on the Braille watch assembly of FIGS. **19***a* and **19***b* and rotated to indicate the Braille number "0" and "PM" in accordance with the third illustrative embodiment.

FIGS. **24***a*, **24***b*, and **24***c* show a side view, a top view, and a bottom view, respectively, of a drive gear of the four disk and pin assemblies of FIG. **17** in accordance with the third illustrative embodiment.

DETAILED DESCRIPTION

With reference to FIG. **1**, a block diagram of a Braille watch **100***a* is shown in accordance with a first illustrative embodiment. In the first illustrative embodiment, Braille watch **100***a* may include a microprocessor **102**, a computer-readable medium **104**, a time display application **106**, a plurality of actuators **108**, a plurality of disks **110**, a plurality of pins **112**, a clock **114**, and one or more buttons **116**. Different and additional or fewer components may be incorporated into Braille watch **100***a*. For example, Braille watch **100***a* also includes a power source (not shown) to power the electrical components of Braille watch **100***a*. Microprocessor **102**, computer-readable medium **104**, the plurality of actuators **108**, clock **114**, and/or the one or more buttons **116** may be integrated to form one or more integrated circuits that may be mounted on one or more circuit boards. The mechanical components of Braille watch **100***a* may be formed of a variety of materials including metal, plastic, wood, etc.

As used in this disclosure, the term "mount" includes join, unite, connect, couple, associate, insert, hang, hold, affix, attach, fasten, bind, paste, secure, bolt, screw, rivet, solder, weld, glue, abut, and other like terms. The phrases "mounted on" and "mounted to" include any interior or exterior portion of the element referenced. These phrases also encompass direct mounting (in which the referenced elements are in direct contact) and indirect mounting (in which the referenced elements are not in direct contact and are mounted together via intermediate elements).

Microprocessor **102** executes instructions as known to those skilled in the art. The instructions may be carried out by a special purpose computer, logic circuits, or hardware circuits. Thus, microprocessor **102** may be implemented in hardware, firmware, or any combination of these methods and/or in combination with software. The term "execution" is the process of running an application or the carrying out of the operation called for by an instruction. The instructions may be written using one or more programming language, scripting language, assembly language, etc. Microprocessor **102** executes an instruction, meaning that it performs/controls the operations called for by that instruction. Microprocessor **102** operably couples with computer-readable medium **104**, the plurality of actuators **108**, clock **114**, and the one or more buttons **116** to receive, to send, and to process information. Microprocessor **102** may retrieve a set of instructions from a permanent memory device and copy the instructions in an executable form to a temporary memory device that is generally some form of random access memory (RAM). Braille watch **100***a* may include a plurality of microprocessors that use the same or a different processing technology.

Computer-readable medium **104** is an electronic holding place or storage for information so that the information can be accessed by microprocessor **102** as known to those skilled in the art. Computer-readable medium **104** can include, but is not limited to, any type of RAM, any type of read only memory (ROM), any type of flash memory, etc. such as magnetic storage devices, optical disks, smart cards, flash memory devices, etc. Braille watch **100***a* may have one or more computer-readable media that use the same or a different memory media technology. Merely for illustration, an ATMega328 microcontroller manufactured by Atmel Corporation may be used to provide microprocessor **102** and computer-readable medium **104**.

Time display application **106** performs operations associated with setting the date and/or time, determining the date and/or time, and/or determining an amount of rotation of the plurality of disks **110**. The time displayed may be based on either a 12 or a 24 hour clock. Some or all of the operations described herein may be embodied in time display application **106**. The operations may be implemented using hardware, firmware, software, or any combination of these methods. With reference to the example embodiment of FIG. **1**, time display application **106** is implemented in software (comprised of computer-readable and/or computer-executable instructions) stored in computer-readable medium **104** and accessible by microprocessor **102** for execution of the instructions that embody the operations of time display application **106**. Time display application **106** may be written

using one or more programming languages, assembly languages, scripting languages, etc.

The plurality of actuators **108** control movement of the plurality of disks **110**. In the first illustrative embodiment, an actuator is mounted to control movement of a single disk. Thus, there are the same number of actuators and disks. Illustrative actuators include an electric motor, a servo, stepper, or piezo motor, a pneumatic actuator, a gas motor, etc. In the first illustrative embodiment, the actuator provides at least 165 degrees of rotation of each disk. Merely for illustration, an HS-55 sub-micro servo motor manufactured by Hitec RCD USA, Inc. may be used. The HS-55 sub-micro servo motor provides up to 180 degrees of rotation using pulse-width modulation.

In an illustrative embodiment, the plurality of pins **112** include four pins associated with each disk of the plurality of disks **110**. The four pins are mounted to form the two by two dot grid needed to represent the numbers 0-9 in the Braille language as shown with reference to FIG. **2**. A disk may be associated with each number displayed using Braille watch **100***a*. In another illustrative embodiment, a disk may be associated with more than one Braille number and a disk may be associated with one or more pins used to form a Braille number. For example, to represent the time in hours and minutes, four disks may be used, two to display the hours from 1 to 12 and two to display the minutes from 0 to 59; to represent the time in hours, minutes, and seconds, six disks may be used; to represent the date in day, month, and year, six or eight disks may be used; to represent the date in day and month, four disks may be used; to represent the time in minutes and seconds, such as in a stop watch, four disks may be used. Braille watch **100***a* need not include a plurality of disks if only the digits 0-9 are needed, for example, in a kitchen timer that can be set for a maximum of nine minutes. Thus, the number of the plurality of disks **110** depends on the time and/or date parameters selected for display using Braille watch **100***a*. If a 12 hour clock is used for the time, the plurality of pins **112** may include an am/pm pin associated with one of the plurality of disks to represent that the time is either am or pm.

With continuing reference to FIG. **1**, clock **114** interfaces with microprocessor **102** to provide the current time and/or date. Merely for illustration, clock **114** may include a DS1307 real time clock manufactured by Maxim Integrated Products. Clock **114** may initially be programmed to the current time and date.

In an illustrative embodiment, the one or more buttons **116** include a first button to change the mode of Braille watch **100***a* and a second button to update the display. Braille watch **100***a* may include three modes. In the first mode, Braille watch **100***a* shows the time in hours and minutes. In the second mode, Braille watch **100***a* shows the time in minutes and seconds. In the third mode, Braille watch **100***a* shows the month and day. Depression of the first button switches between the three modes. Other time parameter combinations may be selectable or presented by default. Thus, time parameters include a second, a minute, an hour, a day, a month, and a year, which may be in a four- or a two-digit format. One or more time parameter may be selected for display by Braille watch **100***a* using the first button to toggle between modes. When the second button is depressed, the updated information associated with the currently selected mode is displayed. In an illustrative embodiment, the plurality of actuators **108** do not move unless the first button or the second button is depressed to reduce the amount of power consumed by the plurality of actuators **108**. Merely for illustration, the first button and the second button include COM-09190 momentary push button switches manufactured by Sparkfun™ Electronics.

In an illustrative embodiment, microprocessor **102** receives a signal that either of the first button or the second button is depressed. In response, microprocessor **102** interfaces with clock **114** to request the current time information and to receive the requested time information. Microprocessor **102** executing time display application **106** determines the amount of rotation for each of the plurality of actuators **108** based on the received information and the mode selected by the user. Each disk of the plurality of disks **110** is mounted to an actuator of the plurality of actuators **108**. Microprocessor **102** interfaces with the plurality of actuators **108** to rotate the plurality of disks **110** to display the requested information to the user through the plurality of pins **112**. For example, time display application **106** determines the appropriate signal to each actuator of the plurality of actuators **108**. In response to receipt of the signal, a respective actuator rotates the associated disk to the desired angle, forming the pin configuration that displays the correct Braille number for the selected one or more time parameters.

With reference to FIGS. **3***a* and **3***b*, a first disk **300** of the plurality of disks **110** is shown in accordance with an illustrative embodiment. In the illustrative embodiment, first disk **300** includes a first raised surface **302**, a second raised surface **304**, a third raised surface **306**, a first surface **308**, a second surface **310**, and a third surface **312**. First raised surface **302**, second raised surface **304**, and third raised surface **306** extend out of the surface of the page relative to first surface **308**, second surface **310**, and third surface **312**. Thus, first surface **308**, second surface **310**, and third surface **312** form a base surface. First raised surface **302**, second raised surface **304**, and third raised surface **306** are elevated above the base surface. First disk **300** further includes a transition surface that provides a sloped surface between first raised surface **302**, second raised surface **304**, and third raised surface **306** and the base surface.

Associated with first disk **300** are a first pin **314**, a second pin **316**, a third pin **318**, and a fourth pin **320** of the plurality of pins **112**. When first pin **314**, second pin **316**, third pin **318**, and/or fourth pin **320** are positioned above first raised surface **302**, second raised surface **304**, or third raised surface **306**, the head of each respective pin can be detected by the user. The plurality of pins **112** are mounted to be approximately flush with a top surface of a top plate when the base surface is positioned below one or more of the plurality of pins **112**.

For example, with reference to FIG. **7**, a side view of first disk **300** is shown in accordance with an illustrative embodiment. In the illustrative embodiment, a raised surface **700** extends above a base surface **701** of first disk **300**. For example, raised surface **700** may include first raised surface **302**, second raised surface **304**, or third raised surface **306**, and base surface **701** of first disk **300** may include first surface **308**, second surface **310**, and third surface **312**. At the orientation shown in FIG. **7**, first disk **300** has been rotated such that second pin **316** is positioned above raised surface **700** and third pin **318** is positioned above base surface **701** of first disk **300**. First pin **314**, second pin **316**, third pin **318**, and fourth pin **320** are mounted between first disk **300** and a top plate **702**. First pin **314**, second pin **316**, third pin **318**, and fourth pin **320** are mounted to extend through holes in top plate **702**. For example, second pin **316** extends through a first hole **709** in top plate **702**, and third pin **318** extends through a second hole **711** in top plate **702**.

In the orientation shown in FIG. **7**, a head portion **710** of second pin **316** extends above a top surface **704** of top plate

702 so that head portion 710 of second pin 316 can be perceived by the user. A head portion 716 of third pin 318 does not extend above top surface 704 so that head portion 716 of third pin 318 is not perceived by the user. A top of head portion 716 of third pin 318 is generally flush with top surface 704 when third pin 318 is positioned above base surface 701 of first disk 300. When first disk 300 rotates to different positions, different combinations of first pin 314, second pin 316, third pin 318, and fourth pin 320 are raised above top surface 704. In this way, the numbers 0-9 in the Braille language can be displayed by controlling the rotation angle of first disk 300.

To hold first pin 314, second pin 316, third pin 318, and fourth pin 320 inside a casing of Braille watch 100*a*, biasing members are mounted between a bottom surface 705 of top plate 702 and a platform mounted to each pin. For example, with reference to FIG. 7, a first platform 706 is mounted to second pin 316 and a first biasing member 708 is mounted to extend between bottom surface 705 of top plate 702 and a top of first platform 706. First platform 706 is mounted to encircle a shaft of first pin 314. First biasing member 708 is mounted around a portion of the shaft of first pin 314 between first platform 706 and bottom surface 705 of top plate 702. A second platform 712 is mounted to third pin 318 and a second biasing member 714 is mounted to extend between bottom surface 705 of top plate 702 and a top of second platform 712. In an illustrative embodiment, first biasing member 708 and second biasing member 714 are springs that are uncompressed when the respective pin is resting on base surface 701 of first disk 300 and compressed when the respective pin is resting on top raised surface 700 of first disk 300.

In an illustrative embodiment, the plurality of pins 112 are circular and the platforms mounted to each of the plurality of pins 112 are circular though other shapes may be used. The platforms provide a surface for the biasing members to rest on and prevent the respective pin from falling out if Braille watch 100*a* is overturned. The plurality of pins 112 may include a rounded bottom to easily slide up and down slopes on first disk 300. The head portion of each pin may also be rounded. In an illustrative embodiment, each pin of the plurality of pins 112 is less than 0.25 inches (in.) tall and approximately 0.06 in. in diameter.

With continuing reference to FIG. 3*a*, first disk 300 is rotated to form the Braille number 4 because first pin 314 is positioned above first raised surface 302, third pin 318 is positioned above second raised surface 304, and fourth pin 320 is positioned above third raised surface 306 while second pin 316 is positioned above second surface 310. As a result, the head portions of first pin 314, third pin 318, and fourth pin 320 extend above top surface 704 of top plate 702 to form the Braille number 4.

The surface of first disk 300 can be defined to have a first quadrant area 322, a second quadrant area 324, a third quadrant area 326, and a fourth quadrant area 328 formed by a first axis 330 extending through a center of first disk 300 in a first direction and a second axis 332 extending through the center of first disk 300 in a second direction perpendicular to first axis 330. First quadrant area 322, second quadrant area 324, third quadrant area 326, and fourth quadrant area 328 are non-overlapping. First pin 314 is mounted above first quadrant area 322. Second pin 316 is mounted above second quadrant area 324. Third pin 318 is mounted above third quadrant area 326. Fourth pin 320 is mounted above fourth quadrant area 328.

With continuing reference to FIG. 3*b*, first disk 300 is rotated clockwise to form the Braille number 5 because first pin 314 is positioned above first raised surface 302 and third pin 318 is positioned above second raised surface 304, while second pin 316 is positioned above second surface 310 and fourth pin 320 is positioned above first surface 308. As a result, the head portions of first pin 314 and third pin 318 extend above top surface 704 of top plate 702 to form the Braille number 5. The remaining Braille numbers are formed by rotating first disk 300 in a similar manner. Thus, the selected Braille number is formed by controlling the angle of rotation of first disk 300. In the illustrative embodiment, only 165 degrees of rotation is needed to form Braille numbers 0-9.

With reference to FIG. 4, a perspective view of first disk 300 is shown in accordance with an illustrative embodiment. First disk 300 includes a top surface 400, a wall 401, and a bottom surface (not shown). The bottom surface may be generally flat. Though shown as circular, disk 300 may form other shapes including polygons and ellipses. Wall 401 forms the circumference of first disk 300. The interior of first disk 300 may be solid or hollow as long as first disk 300 is sufficiently strong to support the raising and lowering of the plurality of pins 112. Top surface 400 may include first raised surface 302, second raised surface 304, and third raised surface 306. In an illustrative embodiment, first surface 308, second surface 310, and third surface 312 may be formed by etching top surface 400. In another illustrative embodiment, first raised surface 302, second raised surface 304, and third raised surface 306 may be formed by layering of additional material above first surface 308, second surface 310, and third surface 312.

A first transition surface 402 extends between first raised surface 302 and second surface 310. A second transition surface 404 extends between second raised surface 304 and second surface 310. A third transition surface 404 extends between top surface 400 and second surface 310. A fourth transition surface 408 extends between second raised surface 304 and third surface 312. A fifth transition surface 410 extends between third raised surface 306 and third surface 312. A sixth transition surface 600 (shown with reference to FIG. 6) extends between top surface 400 and third surface 312. A seventh transition surface 412 extends between third raised surface 306 and first surface 308. An eighth transition surface 414 extends between first raised surface 302 and first surface 308. A ninth transition surface 602 (shown with reference to FIG. 6) extends between top surface 400 and first surface 308. The transition surfaces may form a variety of angles between approximately 0 degrees and approximately 90 degrees. To allow the plurality of pins 112 to easily transition between the recessed and raised surfaces, a slope of approximately 45 degrees may be used for transition surfaces 402, 404, 408, 410, 412, and 414.

A shaft mounting surface 416 is formed in a center of first disk 300 and may extend partially or entirely through first disk 300. A shaft may be mounted between an actuator and first disk 300 to rotate first disk 300. In another illustrative embodiment, first disk 300 is directly mounted for rotation to the actuator.

With reference to FIG. 5, a top view of first disk 300 is shown in accordance with the illustrative embodiment of FIG. 4. With reference to FIG. 6, a side view of first disk 300 is shown in accordance with the illustrative embodiment of FIG. 4.

A casing in which Braille watch 100*a* is housed may be formed of one or more walls to form a polygonal, circular, or elliptical housing. Top plate 702 may be mounted to the housing a variety of mounting methods. Additionally, one or more plates may be positioned between the surfaces of first disk 300 and top plate 702 to stabilize the plurality of pins 112.

With reference to FIGS. **8***a*, **8***b*, and **8***c* a side perspective view, a top view, and a side view, respectively, of four disk and pin assemblies arranged to indicate the Braille number "1158" in accordance with the first illustrative embodiment are shown. The raised surface is shown with gray shading, the transition surface is shown with black shading, and the base surface is shown in white.

With reference to FIG. **9**, a block diagram of a second Braille watch **100***b* is shown in accordance with a second illustrative embodiment. In the second illustrative embodiment, second Braille watch **100***b* may include an actuator **902**, a plurality of disks, and a plurality of pins associated with each of the plurality of disks. Different and additional or fewer components may be incorporated into Braille watch **100***b*. For example, second Braille watch **100***b* also includes a power source (not shown) to power the electrical components of second Braille watch **100***b*. The mechanical components of second Braille watch **100***a* may be formed of a variety of materials including metal, plastic, wood, etc.

Similar to Braille watch **100***a*, the number of the plurality of disks of second Braille watch **100***b* depends on the time parameters selected for display using second Braille watch **100***b*. In the illustrative embodiment, the plurality of disks of second Braille watch **100***b* include a first disk **904**, a second disk **908**, a third disk **912**, and a fourth disk **916**, which display the time in hours and minutes though the same principles described herein can be applied to include additional or fewer disks and to display different time parameter information such as the seconds, the day, the month, the year, etc.

A first plurality of pins **906** are mounted to first disk **904**. In the second illustrative embodiment, the first plurality of pins **906** include four pins used to display a single number in the Braille language in a manner similar to that discussed previously using raised surfaces. A second plurality of pins **910** are mounted to second disk **908**. In the second illustrative embodiment, the second plurality of pins **910** include four pins used to display a single number in the Braille language in a manner similar to that discussed previously using raised, transition, and base surfaces. A third plurality of pins **914** are mounted to third disk **912**. In the second illustrative embodiment, the third plurality of pins **914** include four pins used to display a single number in the Braille language in a manner similar to that discussed previously using raised surfaces. A fourth plurality of pins **918** are mounted to fourth disk **916**. In the second illustrative embodiment, the fourth plurality of pins **918** include five pins used to display a single number in the Braille language in a manner similar to that discussed previously using raised surfaces and an am/pm pin to indicate that the time is either am or pm.

In the second illustrative embodiment, each of first disk **904**, second disk **908**, third disk **912**, and fourth disk **916** rotate 360 degrees and are linked through one or more gear arms and a plurality of gear teeth. As a result, actuator **902** controls rotation of first disk **904**, which in turn controls rotation of second disk **908** through the one or more gear arms and the plurality of gear teeth. Second disk **908** in turn controls rotation of third disk **912** through the one or more gear arms and the plurality of gear teeth, and third disk **912** in turn controls rotation of fourth disk **916** through the one or more gear arms and the plurality of gear teeth. Using the one or more gear arms and the plurality of gear teeth, actuator **902** may rotate at a constant angular velocity appropriate based on the time parameter displayed with first disk **904**.

In the illustrative embodiment, the surface of each of first disk **904**, second disk **908**, and third disk **912**, is divided into three rings: an outer ring, a middle ring, and an inner ring, each of which contain raised, transition, and base surfaces formed in the face of the respective disk. The surface of fourth disk **916** is divided into four rings: an outer ring, a first middle ring, a second middle ring, and an inner ring, each of which contain raised, transition, and base surfaces formed in the face of fourth disk **916**. As first disk **904**, second disk **908**, third disk **912**, and fourth disk **916** rotate through the gear mechanism interconnecting the disks, the associated pins are raised and lowered to display the desired numbers. As described with reference to Braille watch **100***a*, if a pin is positioned on the raised surface, the head portion of the pin extends above a top surface of second Braille watch **100***b* a sufficient amount to be perceived by a user. If not, the head portion of the pin remains approximately flush with the top surface of second Braille watch **100***b*. When the associated disk rotates to different positions, different combinations of pins are raised or lowered.

Each disk surface may be unique because each disk displays a different set of numbers when the hours and minutes are displayed. First disk **904** displays numbers 0-9, second disk **908** displays numbers 0-5, third disk **912** displays numbers 1-9 and 0-2, and fourth disk **916** displays numbers 0-1. Fourth disk **916** also contains a fourth ring for an am/pm pin. In an illustrative embodiment, a raised am/pm pin may signify PM and a lowered am/pm pin may signify AM though, of course, this may be reversed. Additionally, if military time is used, fourth disk **916** may not include the fourth ring for the am/pm pin. Some disk surfaces may be the same if the same sequence of numbers is displayed.

If second Braille watch **100***b* is structured to present the seconds time parameter, a first disk may display numbers 0-9 and a second disk may display numbers 0-5 similar to the minutes time parameter. If second Braille watch **100***b* is structured to present the day time parameter, a first disk may display numbers 1-9, 0-9, 0-9, and 0-1 and a second disk may display numbers 0-3. If second Braille watch **100***b* is structured to present the month time parameter, a first disk may display numbers 1-9 and 0-2 and a second disk may display numbers 0-1 similar to the hours time parameter. If second Braille watch **100***b* is structured to present the year time parameter in two digits, a first disk may display numbers 0-9 and a second disk may display numbers 0-9. If second Braille watch **100***b* is structured to present the year time parameter in four digits, a first disk may display numbers 0-9, a second disk may display numbers 0-9, a third disk may display numbers 0-9, and a fourth disk may display numbers 1-2.

With reference to FIG. **10**, a first disk **1000** is shown to indicate which surface locations are used to form the numbers 0-9. Associated with each of the numbers 0-9 are four pin locations used to form the associated Braille number. The actual shape of the raised surface is defined based on the characteristics of each number. The two by two grid of pins is overlayed on first disk **1000** so that the four pins follow three different rings. First disk **1000** includes a first ring **1002**, a second ring **1004**, and a third ring **1006**. First ring **1002** is closest to a center of first disk **1000**. Second ring **1004** encircles first ring **1002**, and third ring **1006** encircles second ring **1004**. First ring **1002** comprises a first portion of a first raised surface, second ring **1004** comprises a second portion of the first raised surface and a third portion of the first raised surface, and third ring **1006** comprises a fourth portion of the first raised surface. For example, to form the Braille number "0" as indicated in FIG. **10**, a first pin **1008** is positioned over a first raised portion of the first raised surface positioned in first ring **1002**, a second pin **1010** is positioned over a second raised portion of the first raised surface positioned in second ring **1004**, a third pin **1012** is positioned over a third raised portion of the first raised surface positioned in second ring

1004, and a fourth pin 1014 is positioned over a base surface positioned in third ring 1006 so that fourth pin 1014 is lowered relative to first pin 1008, second pin 1010, and third pin 1012. In the illustrative embodiment, the Braille numbers 0-9 are formed by continuously rotating first disk 1000 in the same direction rather than rotating first disk 1000 to specific angles as described with reference to first disk 300.

With reference to FIG. 11, a gear arm and a plurality of gear teeth are shown in accordance with an illustrative embodiment. A gear arm 1102 is mounted to a first rotating shaft 1100 to rotate in a first direction 1110. A plurality of gear teeth 1106 are mounted to a second rotating shaft 1104 to rotate in a second direction 1112 when gear arm 1102 contacts one of the plurality of gear teeth 1106. For example, in the illustrative embodiment of FIG. 11, gear arm 1102 is contacting a tooth 1108 of the plurality of gear teeth 1106 which causes second rotating shaft 1104 to rotate through an angle in second direction 1112. The plurality of gear teeth 1106 are equally distributed about the circumference of second rotating shaft 1104. Thus, the number of the plurality of gear teeth 1106 defines the angle by which gear 1102 rotates second rotating shaft 1104. For example, in the illustrative embodiment of FIG. 11, the plurality of gear teeth 1106 includes six teeth. Thus, gear arm 1102 rotates second rotating shaft 1104 by 60 degrees when gear arm 1102 contacts tooth 1108.

With reference to FIGS. 12*a*, 12*b*, 12*c*, and 12*d* a front perspective view, a top back perspective view, a top view, and a front side view, respectively, of a four disk and pin assembly 1200 arranged to indicate the Braille number "0754" are shown in accordance with the second illustrative embodiment. Four disk and pin assembly 1200 may include first disk 904, second disk 908, third disk 912, fourth disk 916, the first plurality of pins 906, the second plurality of pins 910, the third plurality of pins 914, and the fourth plurality of pins 918, and a base plate 1202. The fourth plurality of pins 918 include a fifth pin 1219 used to indicate whether the time is am or pm. A first shaft 1220 mounts first disk 904 to base plate 1202. A second shaft 1222 mounts second disk 908 to base plate 1202. A third shaft 1224 mounts third disk 912 to base plate 1202. A fourth shaft 1226 mounts fourth disk 916 to base plate 1202. A first gear arm 1228 is mounted to first shaft 1220 to rotate with first shaft 1220 and first disk 904. A first plurality of gear teeth 1230 are mounted to second shaft 1222 to rotate second shaft 1222 when first gear arm 1228 contacts one tooth of the first plurality of gear teeth 1230. A second gear arm 1232 and a third gear arm 1234 are mounted to second shaft 1222 to rotate with second shaft 1222 and second disk 908. A second plurality of gear teeth 1236 are mounted to third shaft 1224 to rotate third shaft 1224 when either second gear arm 1232 or third gear arm 1234 contact one tooth of the second plurality of gear teeth 1236. A fourth gear arm 1238 and a fifth gear arm 1240 are mounted to third shaft 1224 to rotate with third shaft 1224 and third disk 912. A third plurality of gear teeth 1242 are mounted to fourth shaft 1226 to rotate fourth shaft 1226 when either fourth gear arm 1238 or fifth gear arm 1240 contact one tooth of the third plurality of gear teeth 1242.

Thus, in the illustrative embodiment of FIGS. 12*a*, 12*b*, 12*c*, and 12*d*, when first disk 904 rotates 360 degrees, first gear arm 1228 of first disk 904 contacts teeth of the first plurality of gear teeth 1230 causing second disk 908 to rotate. When second disk 908 rotates 180 degrees, second gear arm 1232 of second disk 908 contacts teeth of the second plurality of gear teeth 1236 of third disk 912 causing third disk 912 to rotate. When second disk 908 rotates another 180 degrees, third gear arm 1234 of second disk 908 contacts teeth of the second plurality of gear teeth 1236 of third disk 912 causing third disk 912 to rotate. When third disk 912 rotates 270 degrees, fourth gear arm 1238 of third disk 912 contacts teeth of the third plurality of gear teeth 1242 of fourth disk 916 causing fourth disk 916 to rotate. When third disk 912 rotates another 90 degrees, fifth gear arm 1240 of third disk 912 contacts teeth of the third plurality of gear teeth 1242 of fourth disk 916 causing fourth disk 916 to rotate. The first plurality of gear teeth 1230, the second plurality of gear teeth 1236, and the third plurality of gear teeth 1242 each include 12 teeth.

The surface of first disk 904, second disk 908, third disk 912, and fourth disk 916 can be defined to each have a first quadrant area (not shown), a second quadrant area (not shown), a third quadrant area (not shown), and a fourth quadrant area (not shown) as described with reference to FIG. 3*a* for first disk 300. The first plurality of pins 906, the second plurality of pins 910, the third plurality of pins 914, and the fourth plurality of pins 918 are each mounted over the same quadrant of first disk 904, second disk 908, third disk 912, and fourth disk 916 as shown for example in FIGS. 12*a* and 12*c*.

With reference to FIGS. 13*a*, 13*b*, 13*c*, and 13*d* a perspective view, a side view, a top view, and a bottom view, respectively, of first disk 904 are shown in accordance with the second illustrative embodiment. First disk 904 includes a first ring 1302, a second ring 1304, and a third ring 1306. First shaft 1220 mounts to a drive shaft 1300 which mounts to actuator 902 for rotation of first shaft 1220. First ring 1302 includes one or more first raised surfaces, one or more first base surfaces, and one or more first transitions surface between the one or more first raised surfaces and the one or more first base surfaces as discussed previously with reference to the first illustrative embodiment. Second ring 1304 includes one or more second raised surfaces, one or more second base surfaces, and one or more second transitions surface between the one or more second raised surfaces and the one or more second base surfaces as discussed previously with reference to the first illustrative embodiment. Third ring 1306 includes one or more third raised surfaces, one or more third base surfaces, and one or more third transitions surface between the one or more third raised surfaces and the one or more third base surfaces as discussed previously with reference to the first illustrative embodiment. For example, the one or more third raised surfaces include a first raised surface 1308*a*, a second raised surface 1308*b*, and a third raised surface 1308*c*. The one or more third base surfaces include a first base surface 1310*a*, a second base surface 1310*b*, and a third base surface 1310*c*.

With reference to FIGS. 14*a*, 14*b*, 14*c*, and 14*d* a perspective view, a side view, a top view, and a bottom view, respectively, of second disk 908 are shown in accordance with the second illustrative embodiment. Second disk 908 includes a first ring 1400, a second ring 1402, and a third ring 1404. First ring 1400 includes one or more first raised surfaces, one or more first base surfaces, and one or more first transitions surface between the one or more first raised surfaces and the one or more first base surfaces as discussed previously with reference to the first illustrative embodiment. Second ring 1404 includes one or more second raised surfaces, one or more second base surfaces, and one or more second transitions surface between the one or more second raised surfaces and the one or more second base surfaces as discussed previously with reference to the first illustrative embodiment. Third ring 1404 includes one or more third raised surfaces, one or more third base surfaces, and one or more third transitions surface between the one or more third raised surfaces and the one or more third base surfaces as discussed previously with reference to the first illustrative embodiment.

With reference to FIGS. **15***a*, **15***b*, **15***c*, and **15***d* a perspective view, a side view, a top view, and a bottom view, respectively, of third disk **912** are shown in accordance with the second illustrative embodiment. Third disk **912** includes a first ring **1500**, a second ring **1502**, and a third ring **1504**. First ring **1500** includes one or more first raised surfaces, one or more first base surfaces, and one or more first transitions surface between the one or more first raised surfaces and the one or more first base surfaces as discussed previously with reference to the first illustrative embodiment. Second ring **1504** includes one or more second raised surfaces, one or more second base surfaces, and one or more second transitions surface between the one or more second raised surfaces and the one or more second base surfaces as discussed previously with reference to the first illustrative embodiment. Third ring **1504** includes one or more third raised surfaces, one or more third base surfaces, and one or more third transitions surface between the one or more third raised surfaces and the one or more third base surfaces as discussed previously with reference to the first illustrative embodiment.

With reference to FIGS. **16***a*, **16***b*, **16***c*, and **16***d* a perspective view, a side view, a top view, and a bottom view, respectively, of fourth disk **916** are shown in accordance with the second illustrative embodiment. Fourth disk **916** includes a first ring **1600**, a second ring **1602**, a third ring **1604**, and a fourth ring **1606**. First ring **1500** includes one or more first raised surfaces, one or more first base surfaces, and one or more first transitions surface between the one or more first raised surfaces and the one or more first base surfaces as discussed previously with reference to the first illustrative embodiment. Second ring **1502** includes one or more second raised surfaces, one or more second base surfaces, and one or more second transitions surface between the one or more second raised surfaces and the one or more second base surfaces as discussed previously with reference to the first illustrative embodiment. Third ring **1504** includes one or more third raised surfaces, one or more third base surfaces, and one or more third transitions surface between the one or more third raised surfaces and the one or more third base surfaces as discussed previously with reference to the first illustrative embodiment. Fourth ring **1506** includes one or more third raised surfaces, one or more third base surfaces, and one or more third transitions surface between the one or more third raised surfaces and the one or more third base surfaces as discussed previously with reference to the first illustrative embodiment.

With reference to FIG. **17**, a block diagram of a third Braille watch **100***c* is shown in accordance with a third illustrative embodiment. In the third illustrative embodiment, third Braille watch **100***c* may include an actuator **1702**, a drive gear **1704**, a plurality of disks, and a plurality of pins associated with each of the plurality of disks. Different and additional or fewer components may be incorporated into Braille watch **100***c*. For example, third Braille watch **100***c* also includes a power source (not shown) to power the electrical components of third Braille watch **100***c*. The mechanical components of third Braille watch **100***c* may be formed of a variety of materials including metal, plastic, wood, etc.

Similar to Braille watch **100***a*, the number of the plurality of disks of third Braille watch **100***c* depends on the time parameters selected for display using third Braille watch **100***c*. In the illustrative embodiment, the plurality of disks of third Braille watch **100***c* include a first disk **1706**, a second disk **1710**, a third disk **1714**, and a fourth disk **1718**, which display the time in hours and minutes though the same principles described herein can be applied to include additional or fewer disks and to display different time parameter information such as the seconds, the day, the month, the year, etc.

A first plurality of pins **1708** are mounted to first disk **1706**. In the third illustrative embodiment, the first plurality of pins **1708** include four pins used to display a single number in the Braille language in a manner similar to that discussed previously using raised surfaces. A second plurality of pins **1712** are mounted to second disk **1710**. In the third illustrative embodiment, the second plurality of pins **1712** include four pins used to display a single number in the Braille language in a manner similar to that discussed previously using raised, transition, and base surfaces. A third plurality of pins **1716** are mounted to third disk **1714**. In the third illustrative embodiment, the third plurality of pins **1716** include four pins used to display a single number in the Braille language in a manner similar to that discussed previously using raised surfaces. A fourth plurality of pins **1720** are mounted to fourth disk **1718**. In the third illustrative embodiment, the fourth plurality of pins **1720** include five pins used to display a single number in the Braille language in a manner similar to that discussed previously using raised surfaces and an am/pm pin to indicate that the time is either am or pm.

In the third illustrative embodiment, each of first disk **1706**, second disk **1710**, third disk **1714**, and fourth disk **1718** rotate 360 degrees and are linked through one or more gear arms and a plurality of gear teeth. Actuator **1702** controls rotation of drive gear **1704** which controls rotation of first disk **1706** through the one or more gear arms and the plurality of gear teeth. First disk **1706** in turn controls rotation of second disk **1710** through the one or more gear arms and the plurality of gear teeth. Second disk **1710** in turn controls rotation of third disk **1714** through the one or more gear arms and the plurality of gear teeth, and third disk **1714** in turn controls rotation of fourth disk **1718** through the one or more gear arms and the plurality of gear teeth. Using the one or more gear arms and the plurality of gear teeth, actuator **1702** may rotate at a constant angular velocity appropriate based on the time parameter displayed with first disk **1706** and the one or more gear arms and the plurality of gear teeth mounted to first disk **1706**.

In the illustrative embodiment, the surface of each of first disk **1706**, second disk **1710**, and third disk **1714** is divided into three rings: an outer ring, a middle ring, and an inner ring, each of which contain raised, transition, and base surfaces formed in the face of the respective disk. The surface of fourth disk **1718** is divided into four rings: an outer ring, a first middle ring, a second middle ring, and an inner ring, each of which contain raised, transition, and base surfaces formed in the face of fourth disk **1718**. As first disk **1706**, second disk **1710**, and third disk **1714** rotate through the gear mechanism interconnecting the disks, the associated pins are raised and lowered to display the desired numbers. As described with reference to Braille watch **100***a*, if a pin is positioned on the raised surface, the head portion of the pin extends above a top surface of third Braille watch **100***c* a sufficient amount to be perceived by a user. If not, the head portion of the pin remains approximately flush with the top surface of third Braille watch **100***c*. When the associated disk rotates to different positions, different combinations of pins are raised or lowered.

Each disk surface may be unique because each disk displays a different set of numbers when the hours and minutes are displayed. First disk **1706** displays numbers 0-9, second disk **1710** displays numbers 0-5, third disk **1714** displays numbers 1-9 and 0-2, and fourth disk **1718** displays numbers 0-1. Fourth disk **1718** also contains a fourth ring for an am/pm pin. In an illustrative embodiment, a raised am/pm pin may

signify PM and a lowered am/pm pin may signify AM though, of course, this may be reversed.

If third Braille watch **100***c* is structured to present the seconds time parameter, a first disk may display numbers 0-9 and a second disk may display numbers 0-5 similar to the minutes time parameter. If third Braille watch **100***c* is structured to present the day time parameter, a first disk may display numbers 1-9, 0-9, 0-9, and 0-1 and a second disk may display numbers 0-3. If third Braille watch **100***c* is structured to present the month time parameter, a first disk may display numbers 1-9 and 0-2 and a second disk may display numbers 0-1 similar to the hours time parameter. If third Braille watch **100***c* is structured to present the year time parameter in two digits, a first disk may display numbers 0-9 and a second disk may display numbers 0-9. If third Braille watch **100***c* is structured to present the year time parameter in four digits, a first disk may display numbers 0-9, a second disk may display numbers 0-9, a third disk may display numbers 0-9, and a fourth disk may display numbers 1-2. Of course, Braille watch **100***a*, second Braille watch **100***b*, and third Braille watch **100***c* may include from one to 10 disks or more depending on the set of time parameters to be displayed.

With reference to FIGS. **18***a*, **18***b*, **18***c*, and **18***d* show a front perspective view, a top view, a right side perspective view, and a front side view, respectively, of four disk and pin assemblies arranged to indicate the Braille number "0916" in accordance with the third illustrative embodiment. FIG. **18***e* shows a front perspective view of a gearing mechanism of the four disk and pin assemblies of FIGS. **18***a*, **18***b*, **18***c*, and **18***d* in accordance with the third illustrative embodiment.

With reference to FIGS. **18***a*, **18***b*, **18***c*, and **18***d* a front perspective view, a top view, a right side perspective view, and a front side view, respectively, of a four disk and pin assembly **1800** arranged to indicate the Braille number "0916" are shown in accordance with the third illustrative embodiment. Four disk and pin assembly **1800** may include first disk **1706**, second disk **1710**, third disk **1714**, fourth disk **1718**, the first plurality of pins **1708**, the second plurality of pins **1712**, the third plurality of pins **1716**, and the fourth plurality of pins **1720**, and a base plate **1802**. The fourth plurality of pins **1720** include a fifth pin **1819** used to indicate whether the time is am or pm. A first shaft **1820** mounts first disk **1706** to base plate **1802**. A second shaft **1822** mounts second disk **1710** to base plate **1802**. A third shaft **1824** mounts third disk **1714** to base plate **1802**. A fourth shaft **1826** mounts fourth disk **1718** to base plate **1802**. A first gear arm **1828** is mounted to first shaft **1820** to rotate with first shaft **1820** and first disk **1706**. A first plurality of gear teeth **1830** are mounted to second shaft **1822** to rotate second shaft **1822** when first gear arm **1828** contacts one tooth of the first plurality of gear teeth **1830**. A second gear arm **1832** and a third gear arm **1834** are mounted to second shaft **1822** to rotate with second shaft **1822** and second disk **1710**. A second plurality of gear teeth **1836** are mounted to third shaft **1824** to rotate third shaft **1824** when either second gear arm **1832** or third gear arm **1834** contact one tooth of the second plurality of gear teeth **1836**. A fourth gear arm **1838** and a fifth gear arm **1840** are mounted to third shaft **1824** to rotate with third shaft **1824** and third disk **1714**. A third plurality of gear teeth **1842** are mounted to fourth shaft **1826** to rotate fourth shaft **1826** when either fourth gear arm **1838** or fifth gear arm **1840** contact one tooth of the third plurality of gear teeth **1842**.

Thus, in the illustrative embodiment of FIGS. **18***a*, **18***b*, **18***c*, and **18***d*, when first disk **1706** rotates 360 degrees, first gear arm **1828** of first disk **1706** contacts teeth of the first plurality of gear teeth **1830** causing second disk **1710** to rotate. When second disk **1710** rotates 180 degrees, second gear arm **1832** of second disk **1710** contacts teeth of the second plurality of gear teeth **1836** of third disk **1714** causing third disk **1714** to rotate. When second disk **1710** rotates another 180 degrees, third gear arm **1834** of second disk **1710** contacts teeth of the second plurality of gear teeth **1836** of third disk **1714** causing third disk **1714** to rotate. When third disk **1714** rotates 270 degrees, fourth gear arm **1838** of third disk **1714** contacts teeth of the third plurality of gear teeth **1842** of fourth disk **1718** causing fourth disk **1718** to rotate. When third disk **1714** rotates another 90 degrees, fifth gear arm **1840** of third disk **1714** contacts teeth of the third plurality of gear teeth **1842** of fourth disk **1718** causing fourth disk **1718** to rotate. The first plurality of gear teeth **1830**, the second plurality of gear teeth **1836**, and the third plurality of gear teeth **1842** each include 12 teeth. Of course, other gear ratios may be used.

The surface of first disk **1706**, second disk **1710**, third disk **1714**, and fourth disk **1718** can be defined to each have a first quadrant area (not shown), a second quadrant area (not shown), a third quadrant area (not shown), and a fourth quadrant area (not shown) as described with reference to FIG. **3***a* for first disk **300**. The first plurality of pins **1708** and the third plurality of pins **1716** are each mounted over the same quadrant of first disk **904** and third disk **912** as shown for example in FIG. **18***b*. For example, with reference to the view of FIG. **18***b*, the first plurality of pins **1708** and the third plurality of pins **1716** are each mounted over a lower left quadrant of first disk **904** and third disk **912**. The second plurality of pins **1712** and the fourth plurality of pins **1720** are each mounted over the same quadrant of second disk **908** and fourth disk **916** as shown for example in FIG. **18***b* as an upper right quadrant.

Second disk **1710** is mounted to spatially overlap with first disk **1706** when viewed from above as shown in FIG. **18***b*. Third disk **1714** is mounted to spatially overlap with second disk **1710** when viewed from above as shown in FIG. **18***b*. Fourth disk **1718** is mounted to spatially overlap with second disk **1710** and with third disk **1714** when viewed from above as shown in FIG. **18***b*.

First disk **1706** is connected to drive gear **1704**. Drive gear **1704** includes a drive shaft **1850**, a drive platform **1852**, and a drive arm **1854**. Drive shaft **1850** connects to actuator **1702** for rotation of drive shaft **1850**. Drive arm **1854** is mounted to drive shaft **1850** to rotate with drive shaft **1850**. Drive platform **1852** is mounted to encircle drive shaft **1850** to keep drive gear **1704** from falling out of base plate **1802**. A fourth plurality of gear teeth **1856** are mounted to first shaft **1820** to rotate first shaft **1820** when drive arm **1854** contacts one tooth of the fourth plurality of gear teeth **1856**. In the illustrative embodiment, the fourth plurality of gear teeth **1856** includes 10 teeth.

With reference to FIGS. **19***a* and **19***b*, a front perspective view and a top view, respectively, of a Braille watch assembly arranged to indicate the Braille number "0916" in accordance with the third illustrative embodiment. A housing **1900** of third Braille watch **100***c* includes base plate **1802**, a top plate **1902**, and a plurality of walls.

With reference to FIGS. **20***a*, **20***b*, **20***c*, and **20***d* a perspective view, a side view, a top view, and a bottom view, respectively, of first disk **1706** are shown in accordance with the third illustrative embodiment. First disk **1706** includes a first ring **2000**, a second ring **2002**, and a third ring **2004**. First ring **2000** includes one or more first raised surfaces, one or more first base surfaces, and one or more first transitions surface between the one or more first raised surfaces and the one or more first base surfaces as discussed previously with reference to the first illustrative embodiment. Second ring **2002** includes one or more second raised surfaces, one or more

second base surfaces, and one or more second transitions surface between the one or more second raised surfaces and the one or more second base surfaces as discussed previously with reference to the first illustrative embodiment. Third ring **2004** includes one or more third raised surfaces, one or more third base surfaces, and one or more third transitions surface between the one or more third raised surfaces and the one or more third base surfaces as discussed previously with reference to the first illustrative embodiment.

With reference to FIGS. **20***e* and **20***f*, a front perspective view and a top view of first disk **1706** of FIGS. **20***a*, **20***b*, **20***c*, and **20***d* mounted on the Braille watch assembly of FIGS. **19***a* and **19***b* and rotated to indicate the Braille number "6" in accordance with the third illustrative embodiment. Base plate **1802** includes a first mounting post **2006**, a second mounting post **2008**, and a third mounting post **2010**. Second disk **1710** is mounted to rotate about first mounting post **2006**. Third disk **1714** is mounted to rotate about second mounting post **2008**. Fourth disk **1718** is mounted to rotate about third mounting post **2010**. An aperture **2012** is formed in base plate **1802** to accommodate drive shaft **1850**, but to be smaller in diameter than drive platform **1852**.

With reference to FIGS. **21***a*, **21***b*, **21***c*, and **21***d* a perspective view, a side view, a top view, and a bottom view, respectively, of second disk **1710** are shown in accordance with the second illustrative embodiment. Second disk **1710** includes a first ring **2100**, a second ring **2102**, and a third ring **2104**. First ring **2100** includes one or more first raised surfaces, one or more first base surfaces, and one or more first transitions surface between the one or more first raised surfaces and the one or more first base surfaces as discussed previously with reference to the first illustrative embodiment. Second ring **2104** includes one or more second raised surfaces, one or more second base surfaces, and one or more second transitions surface between the one or more second raised surfaces and the one or more second base surfaces as discussed previously with reference to the first illustrative embodiment. Third ring **2104** includes one or more third raised surfaces, one or more third base surfaces, and one or more third transitions surface between the one or more third raised surfaces and the one or more third base surfaces as discussed previously with reference to the first illustrative embodiment.

With reference to FIGS. **21***e* and **21***f*, a front perspective view and a top view of second disk **1710** of FIGS. **21***a*, **21***b*, **21***c*, and **21***d* mounted on the Braille watch assembly of FIGS. **19***a* and **19***b* and rotated to indicate the Braille number "1" in accordance with the third illustrative embodiment. Base plate **1802** further includes a fourth mounting post **2106**. First disk **1706** is mounted to rotate about fourth mounting post **2106**.

With reference to FIGS. **22***a*, **22***b*, **22***c*, and **22***d* a perspective view, a side view, a top view, and a bottom view, respectively, of third disk **1714** are shown in accordance with the second illustrative embodiment. Third disk **1714** includes a first ring **2200**, a second ring **2202**, and a third ring **2204**. First ring **2200** includes one or more first raised surfaces, one or more first base surfaces, and one or more first transitions surface between the one or more first raised surfaces and the one or more first base surfaces as discussed previously with reference to the first illustrative embodiment. Second ring **2204** includes one or more second raised surfaces, one or more second base surfaces, and one or more second transitions surface between the one or more second raised surfaces and the one or more second base surfaces as discussed previously with reference to the first illustrative embodiment. Third ring **2204** includes one or more third raised surfaces, one or more third base surfaces, and one or more third transitions surface between the one or more third raised surfaces and the one or more third base surfaces as discussed previously with reference to the first illustrative embodiment.

With reference to FIGS. **22***e* and **22***f*, a front perspective view and a top view of third disk **1714** of FIGS. **22***a*, **22***b*, **22***c*, and **22***d* mounted on the Braille watch assembly of FIGS. **19***a* and **19***b* and rotated to indicate the Braille number "9" in accordance with the third illustrative embodiment.

With reference to FIGS. **23***a*, **23***b*, **23***c*, and **23***d* a perspective view, a side view, a top view, and a bottom view, respectively, of fourth disk **1718** are shown in accordance with the second illustrative embodiment. Fourth disk **1718** includes a first ring **2300**, a second ring **2302**, a third ring **2304**, and a fourth ring **2306**. First ring **2300** includes one or more first raised surfaces, one or more first base surfaces, and one or more first transitions surface between the one or more first raised surfaces and the one or more first base surfaces as discussed previously with reference to the first illustrative embodiment. Second ring **2302** includes one or more second raised surfaces, one or more second base surfaces, and one or more second transitions surface between the one or more second raised surfaces and the one or more second base surfaces as discussed previously with reference to the first illustrative embodiment. Third ring **2304** includes one or more third raised surfaces, one or more third base surfaces, and one or more third transitions surface between the one or more third raised surfaces and the one or more third base surfaces as discussed previously with reference to the first illustrative embodiment. Fourth ring **2306** includes one or more third raised surfaces, one or more third base surfaces, and one or more third transitions surface between the one or more third raised surfaces and the one or more third base surfaces as discussed previously with reference to the first illustrative embodiment.

With reference to FIGS. **23***e* and **23***f*, a front perspective view and a top view of fourth disk **1718** of FIGS. **23***a*, **23***b*, **23***c*, and **23***d* mounted on the Braille watch assembly of FIGS. **19***a* and **19***b* and rotated to indicate the Braille number "0" in accordance with the third illustrative embodiment.

With reference to FIGS. **24***a*, **24***b*, and **24***c* show a side view, a top view, and a bottom view, respectively, of drive gear **1704** of the four disk and pin assemblies of FIG. **17** is shown in accordance with the third illustrative embodiment.

The word "illustrative" is used herein to mean serving as an example, instance, or illustration. Any aspect or design described herein as "illustrative" is not necessarily to be construed as preferred or advantageous over other aspects or designs. Further, for the purposes of this disclosure and unless otherwise specified, "a" or "an" means "one or more". Still further, the use of "and" or "or" is intended to include "and/or" unless specifically indicated otherwise. The illustrative embodiments may be implemented as a method, apparatus, or article of manufacture using standard programming and/or engineering techniques to produce software, firmware, hardware, or any combination thereof to control a computer to implement the disclosed embodiments.

The foregoing description of illustrative embodiments of the invention has been presented for purposes of illustration and of description. It is not intended to be exhaustive or to limit the invention to the precise form disclosed, and modifications and variations are possible in light of the above teachings or may be acquired from practice of the invention. The embodiments were chosen and described in order to explain the principles of the invention and as practical applications of the invention to enable one skilled in the art to utilize the invention in various embodiments and with various modifications as suited to the particular use contemplated. It is

intended that the scope of the invention be defined by the claims appended hereto and their equivalents.

What is claimed is:

1. A Braille watch comprising:
a first disk, wherein the first disk comprises a first raised surface;
a first plurality of pins comprising a first pin, a second pin, a third pin, and a fourth pin;
a top plate comprising a first hole, a second hole, a third hole, and a fourth hole;
wherein the first pin is mounted to slide within the first hole, the second pin is mounted to slide within the second hole, the third pin is mounted to slide within the third hole, and the fourth pin is mounted to slide within the fourth hole;
and further wherein the first pin is mounted above the first disk to extend above a top surface of the top plate when a first portion of the first raised surface is positioned below the first pin, the second pin is mounted above the first disk to extend above the top surface of the top plate when a second portion of the first raised surface is positioned below the second pin, the third pin is mounted above the first disk to extend above the top surface of the top plate when a third portion of the first raised surface is positioned below the third pin, and the fourth pin is mounted above the first disk to extend above the top surface of the top plate when a fourth portion of the first raised surface is positioned below the fourth pin; and
an actuator mounted to the first disk and configured to rotate the first disk to form a Braille number with one or more of the first plurality of pins.

2. The Braille watch of claim 1, further comprising:
a platform mounted to encircle a shaft of the first pin; and
a spring mounted around a portion of the shaft of the first pin between the platform and a bottom surface of the top plate.

3. The Braille watch of claim 1, further comprising:
a second disk, wherein the second disk comprises a second raised surface; and
a second plurality of pins comprising a fifth pin, a sixth pin, a seventh pin, and an eighth pin;
wherein the top plate further comprises a fifth hole, a sixth hole, a seventh hole, and an eighth hole;
wherein the fifth pin is mounted to slide within the fifth hole, the sixth pin is mounted to slide within the sixth hole, the seventh pin is mounted to slide within the seventh hole, and the eighth pin is mounted to slide within the eighth hole;
and further wherein the fifth pin is mounted above the second disk to extend above the top surface of the top plate when a first portion of the second raised surface is positioned below the fifth pin, the sixth pin is mounted above the second disk to extend above the top surface of the top plate when a second portion of the second raised surface is positioned below the sixth pin, the seventh pin is mounted above the second disk to extend above the top surface of the top plate when a third portion of the second raised surface is positioned below the seventh pin, and the eighth pin is mounted above the second disk to extend above the top surface of the top plate when a fourth portion of the second raised surface is positioned below the eighth pin.

4. The Braille watch of claim 3, wherein the first raised surface and the second raised surface have the same shape.

5. The Braille watch of claim 3, further comprising a second actuator mounted to the second disk and configured to rotate the second disk to form a second Braille number with one or more of the second plurality of pins.

6. The Braille watch of claim 3, further comprising:
a first shaft mounted for rotation by the actuator, wherein the first disk is mounted to the first shaft;
a second shaft, wherein the second disk is mounted to the second shaft;
a gear arm mounted to the first shaft, wherein the gear arm and the first disk rotate with the first shaft; and
a plurality of gear teeth mounted to the second shaft, wherein the gear arm is mounted to contact a tooth of the plurality of gear teeth to rotate the second disk through a first angle.

7. The Braille watch of claim 6, further comprising a second gear arm mounted to the first shaft, wherein the second gear arm rotates with the first shaft, and further wherein the second gear arm is mounted to contact a second tooth of the plurality of gear teeth to rotate the second disk through a second angle.

8. The Braille watch of claim 7, wherein the first angle is approximately equal to the second angle.

9. The Braille watch of claim 6, further comprising:
a drive shaft mounted to the actuator for rotation by the actuator;
a drive arm mounted to the drive shaft, wherein the drive arm rotates with the drive shaft; and
a second plurality of gear teeth mounted to the first shaft, wherein the drive arm is mounted to contact a tooth of the second plurality of gear teeth to rotate the first disk through a second angle.

10. The Braille watch of claim 9, wherein the actuator rotates the drive shaft at a constant angular velocity.

11. The Braille watch of claim 6, wherein the second disk is mounted to spatially overlap with the first disk when viewed from above the second raised surface.

12. The Braille watch of claim 11, wherein the first raised surface has a first quadrant area, a second quadrant area, a third quadrant area, and a fourth quadrant area, wherein the first quadrant area, the second quadrant area, the third quadrant area, and the fourth quadrant area are non-overlapping, and further wherein the first pin, the second pin, the third pin, and the fourth pin are mounted above the first quadrant area; and
further wherein the second raised surface has a corresponding first quadrant area, a corresponding second quadrant area, a corresponding third quadrant area, and a corresponding fourth quadrant area, and further wherein the fifth pin, the sixth pin, the seventh pin, and the eighth pin are mounted above the corresponding second quadrant area.

13. The Braille watch of claim 1, wherein the first plurality of pins further comprises a fifth pin, wherein the fifth pin indicates a time is am or pm.

14. The Braille watch of claim 1, wherein the first raised surface comprises a first ring, a second ring, and a third ring, wherein the first ring is closest to a center of the first disk, the second ring encircles the first ring, and the third ring encircles the second ring;
and further wherein the first ring comprises the first portion of the first raised surface, the second ring comprises the second portion of the first raised surface and the third portion of the first raised surface, and the third ring comprises the fourth portion of the first raised surface.

15. The Braille watch of claim 1, wherein the first raised surface has a first quadrant area, a second quadrant area, a third quadrant area, and a fourth quadrant area, wherein the first quadrant area, the second quadrant area, the third quad-

rant area, and the fourth quadrant area are non-overlapping, and further wherein the first pin is mounted above the first quadrant area, the second pin is mounted above the second quadrant area, the third pin is mounted above the third quadrant area, and the fourth pin is mounted above the fourth quadrant area.

16. The Braille watch of claim **1**, further comprising:

a microprocessor;

a clock operably coupled to the microprocessor; and

a computer-readable medium operably coupled to the microprocessor, the computer-readable medium having computer-readable instructions stored thereon that, when executed by the microprocessor, cause the microprocessor to

in response to receipt of an indicator indicating a request to display a time parameter, request the time parameter from the clock;

in response to receipt of the time parameter, calculate an angle to rotate the first disk to form the Braille number representing the time parameter; and

send a signal to the actuator to rotate the first disk to the calculated angle.

17. The Braille watch of claim **16**, further comprising:

a button;

wherein the computer-readable instructions further cause the microprocessor to receive a mode indicator in response to selection of the button; and in response to receipt of the mode indicator, to determine the time parameter to be displayed.

18. The Braille watch of claim **17**, wherein the time parameter is one or more of a second, a minute, an hour, a day, a month, and a year.

19. The Braille watch of claim **1**, wherein the first disk further comprises a base surface, wherein the first raised surface is elevated above the base surface, and further wherein the first pin is mounted to be approximately flush with the top surface of the top plate when the base surface is positioned below the first pin, the second pin is mounted to be approximately flush with the top surface of the top plate when the base surface is positioned below the second pin, the third pin is mounted to be approximately flush with the top surface of the top plate when the base surface is positioned below the third pin, and the fourth pin is mounted to be approximately flush with the top surface of the top plate when the base surface is positioned below the fourth pin.

20. The Braille watch of claim **19**, wherein the first disk further comprises a transition surface, wherein the transition surface provides a sloped surface between the first raised surface and the base surface.

* * * * *