US 20250224075A1

(19) United States
(12) Patent Application Publication
Zanni
(10) Pub. No.: US 2025/0224075 A1
(43) Pub. Date: Jul. 10, 2025

(54) VERTICAL SUPPORT ARRANGEMENT FOR AN OPTICAL SYSTEM

(71) Applicant: **Martin Zanni**, Madison, WI (US)

(72) Inventor: **Martin Zanni**, Madison, WI (US)

(21) Appl. No.: **18/409,061**

(22) Filed: **Jan. 10, 2024**

Publication Classification

(51) **Int. Cl.**
F16M 13/02 (2006.01)
B25H 1/16 (2006.01)

(52) **U.S. Cl.**
CPC *F16M 13/022* (2013.01); *B25H 1/16* (2013.01)

(57) **ABSTRACT**

A support arrangement positions an optical system in a generally vertical plane. The support arrangement may include an optical support panel that can be arranged in an upright position. At least one mounting surface of the optical support panel may be arranged vertically so that its entire surface area is within an arms-length distance or freely accessible to a standing or seated user. An unobstructed zone may be defined immediately adjacent to the mounting surface(s), which is substantially devoid of any supporting or other structures as mechanical barriers to the vertical mounting surface(s). The optical support panel may be rotationally and/or height adjustably mounted within a frame. A control system may facilitate remote height and/or angular position adjustments of the optical support panel.

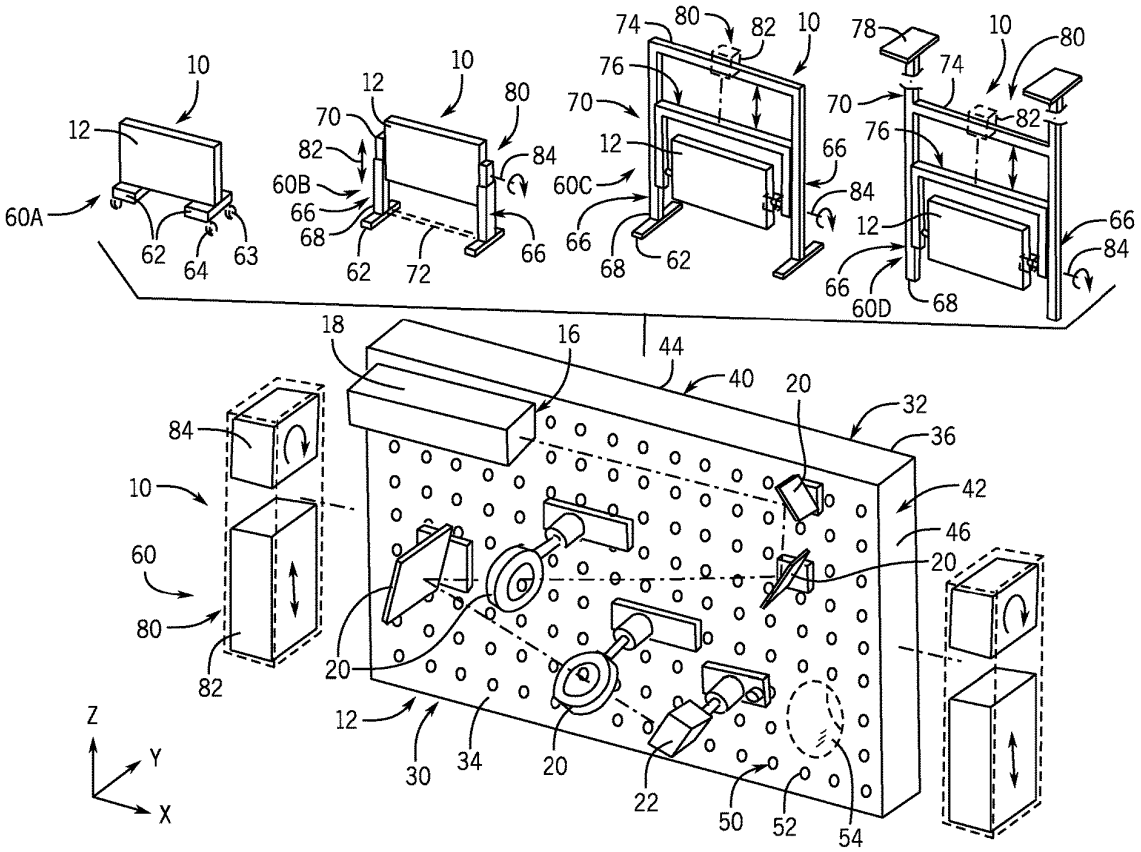

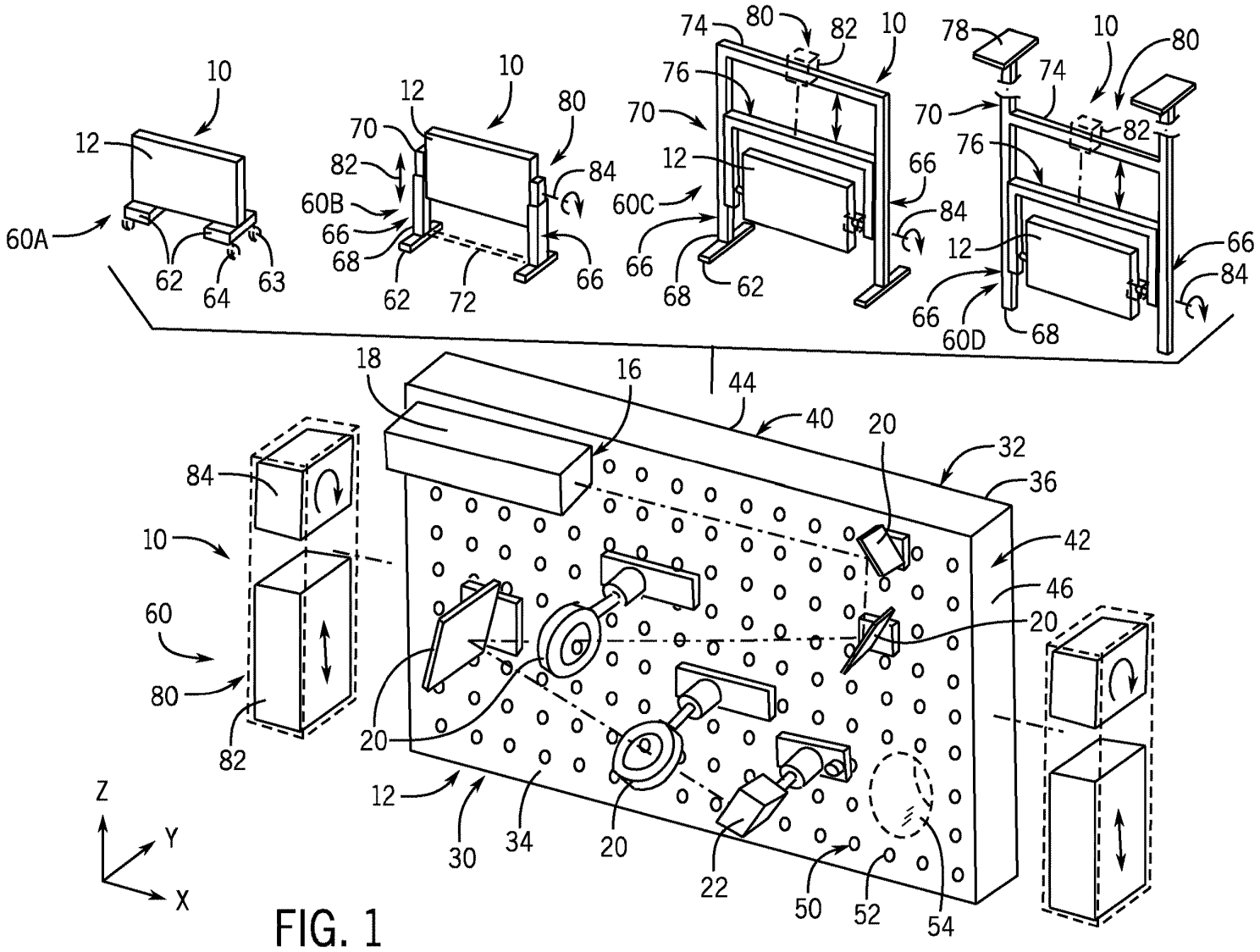
10
12
60A
62
64
63
10
12
70
82
60B
66
68
62
72
80
84
66
74
80
82
10
76
70
12
60C
66
68
62
84
78
10
80
74
70
82
76
12
66
84
66
60D
68
18
16
44
40
20
32
36
42
46
20
84
10
60
80
82
20
12
30
34
20
22
50
52
54
Z
Y
X

FIG. 1

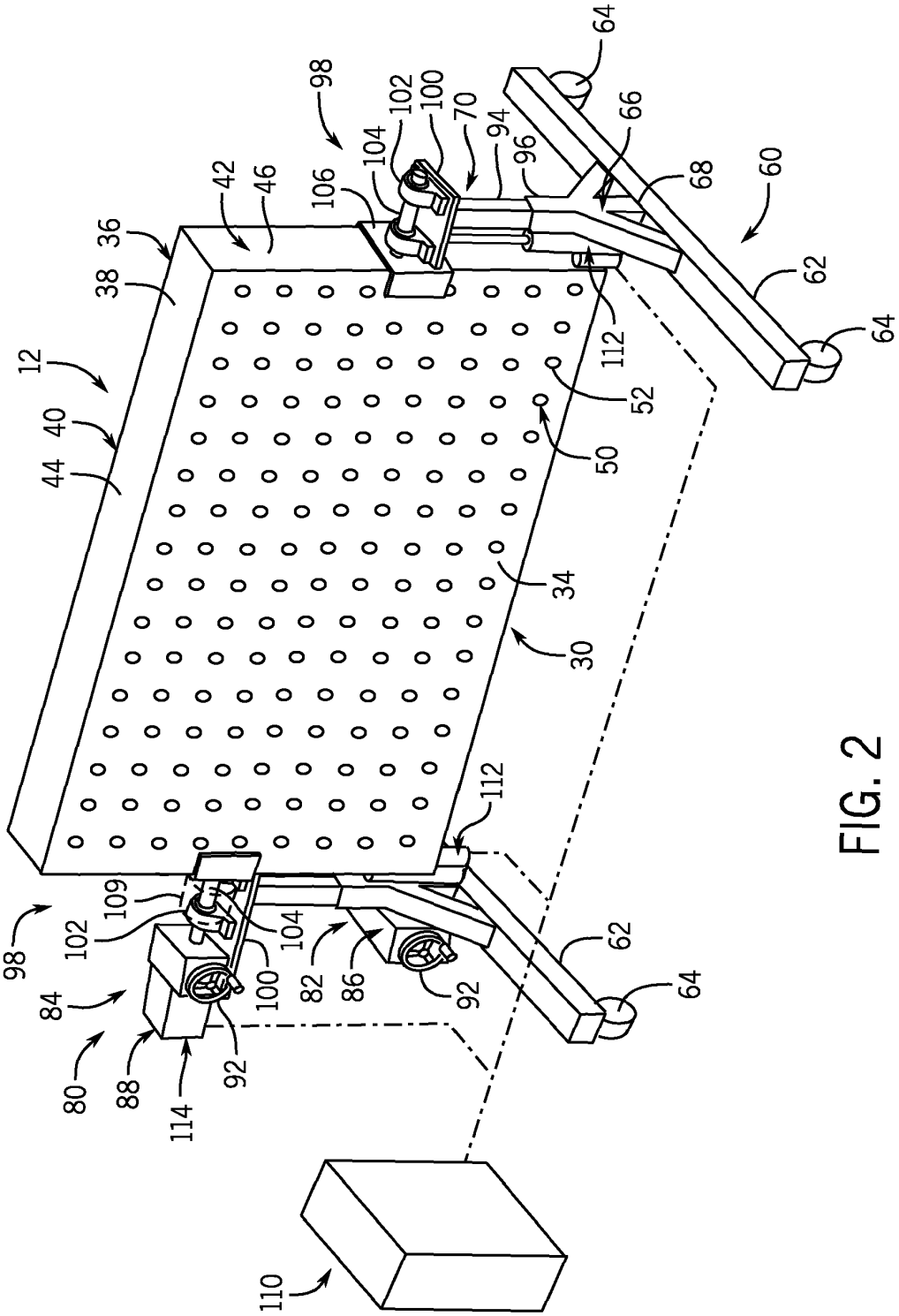
12
36
38
40
42
44
46
30
34
50
52
60
62
64
66
68
70
80
82
84
86
88
92
94
96
98
100
102
104
106
109
110
112
114

FIG. 2

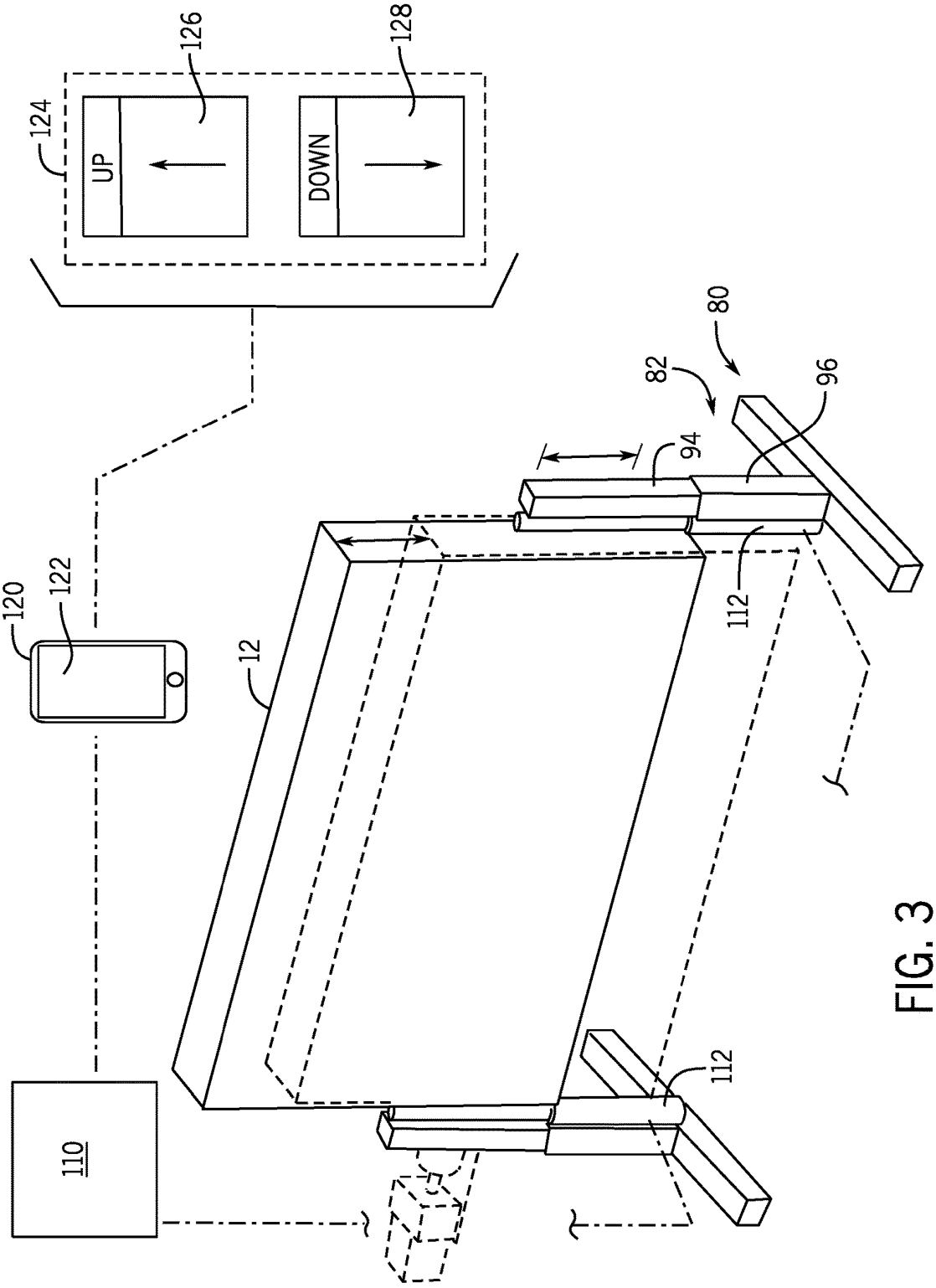

FIG. 3

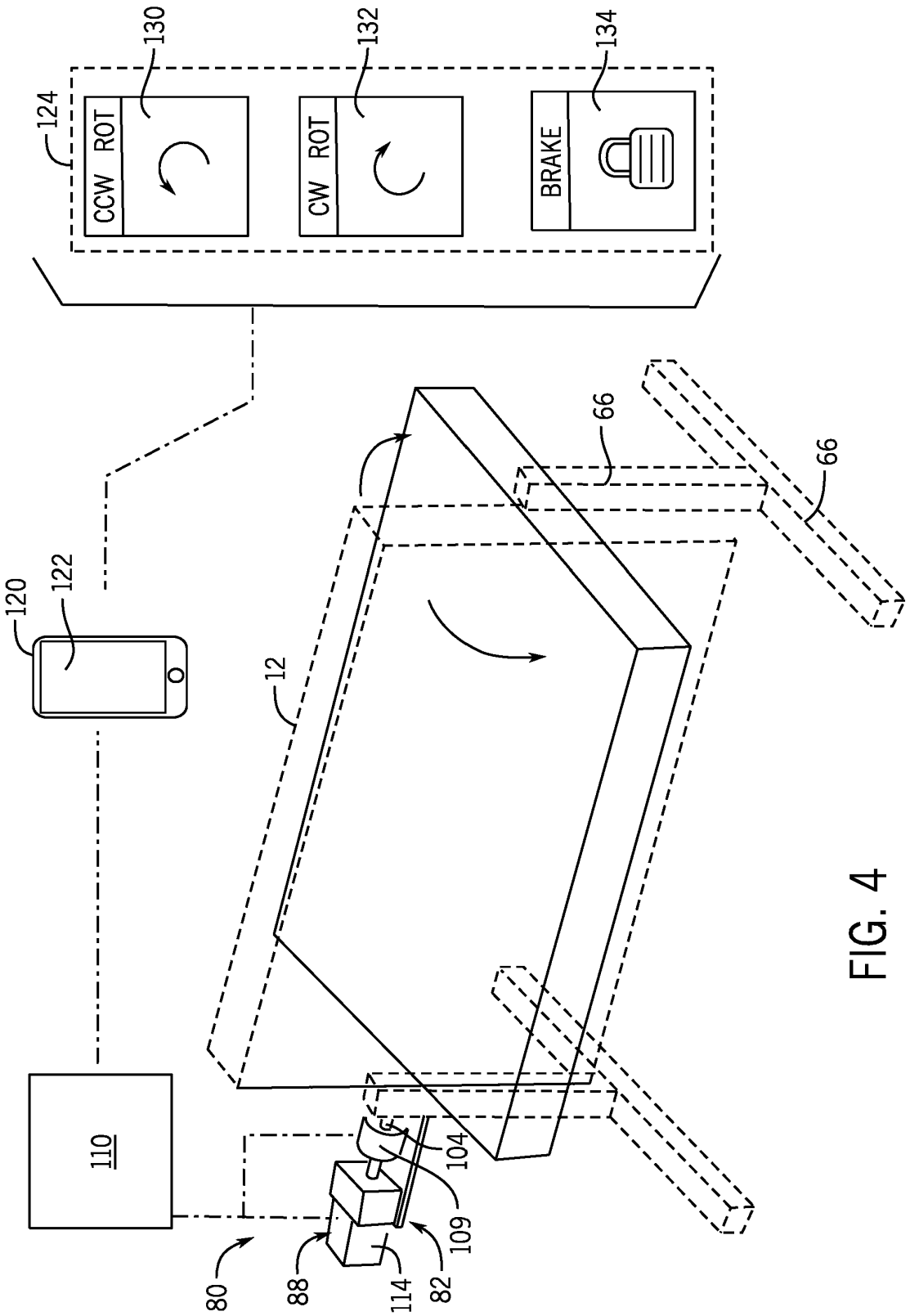
124
CCW ROT
130
CW ROT
132
BRAKE
134
120
122
110
12
66
66
80
88
114
82
109
104

FIG. 4

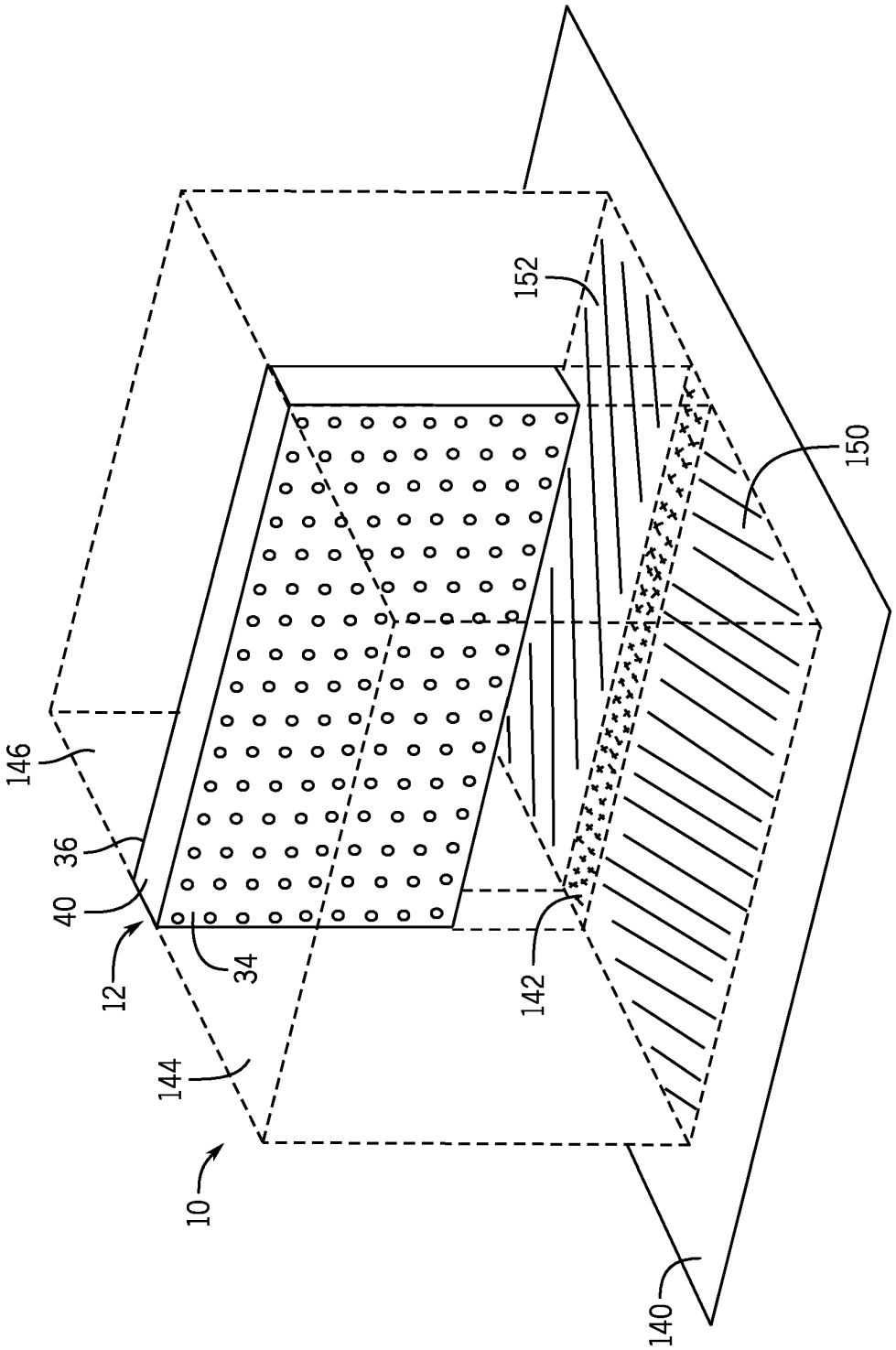

FIG. 5

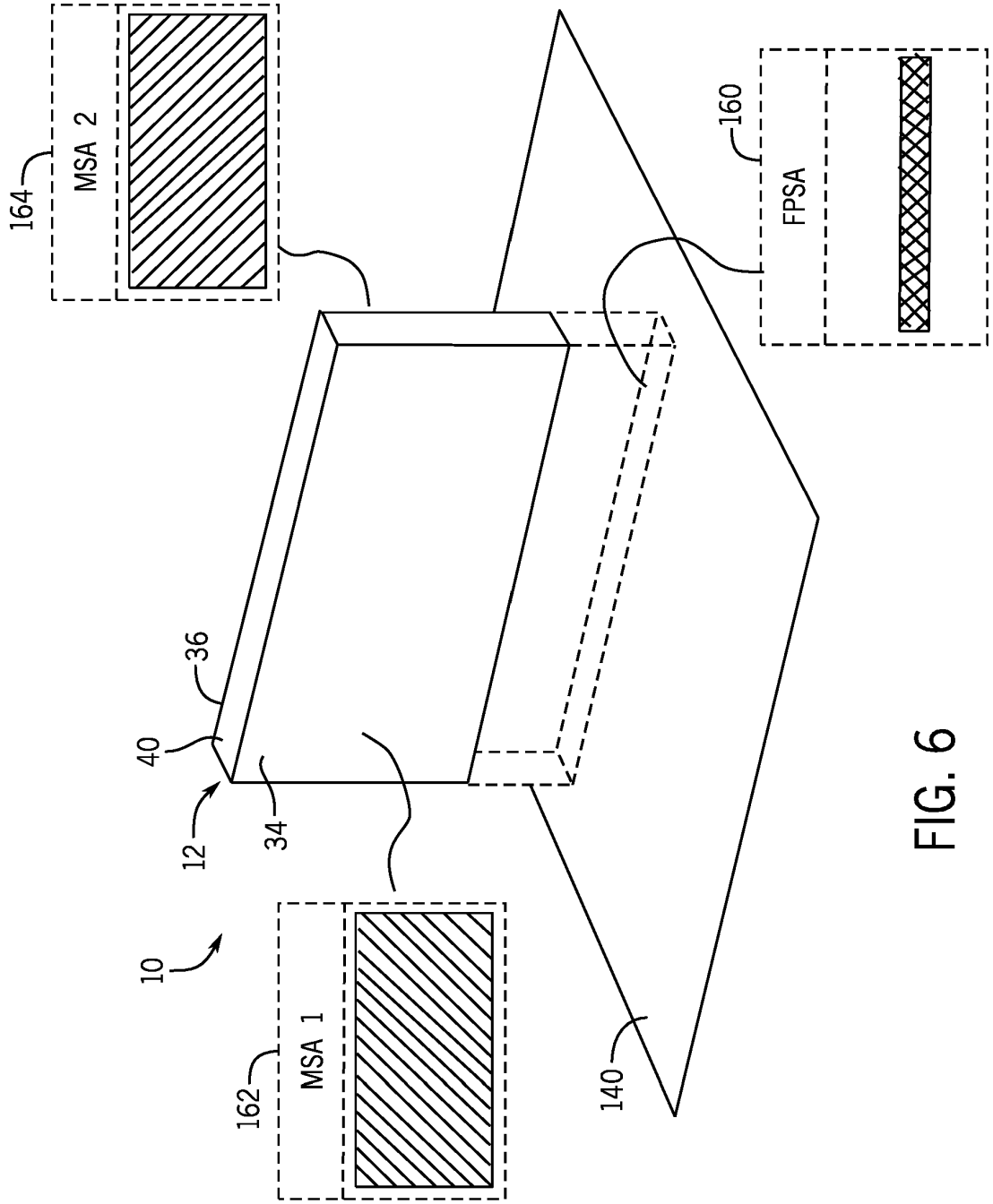

FIG. 6

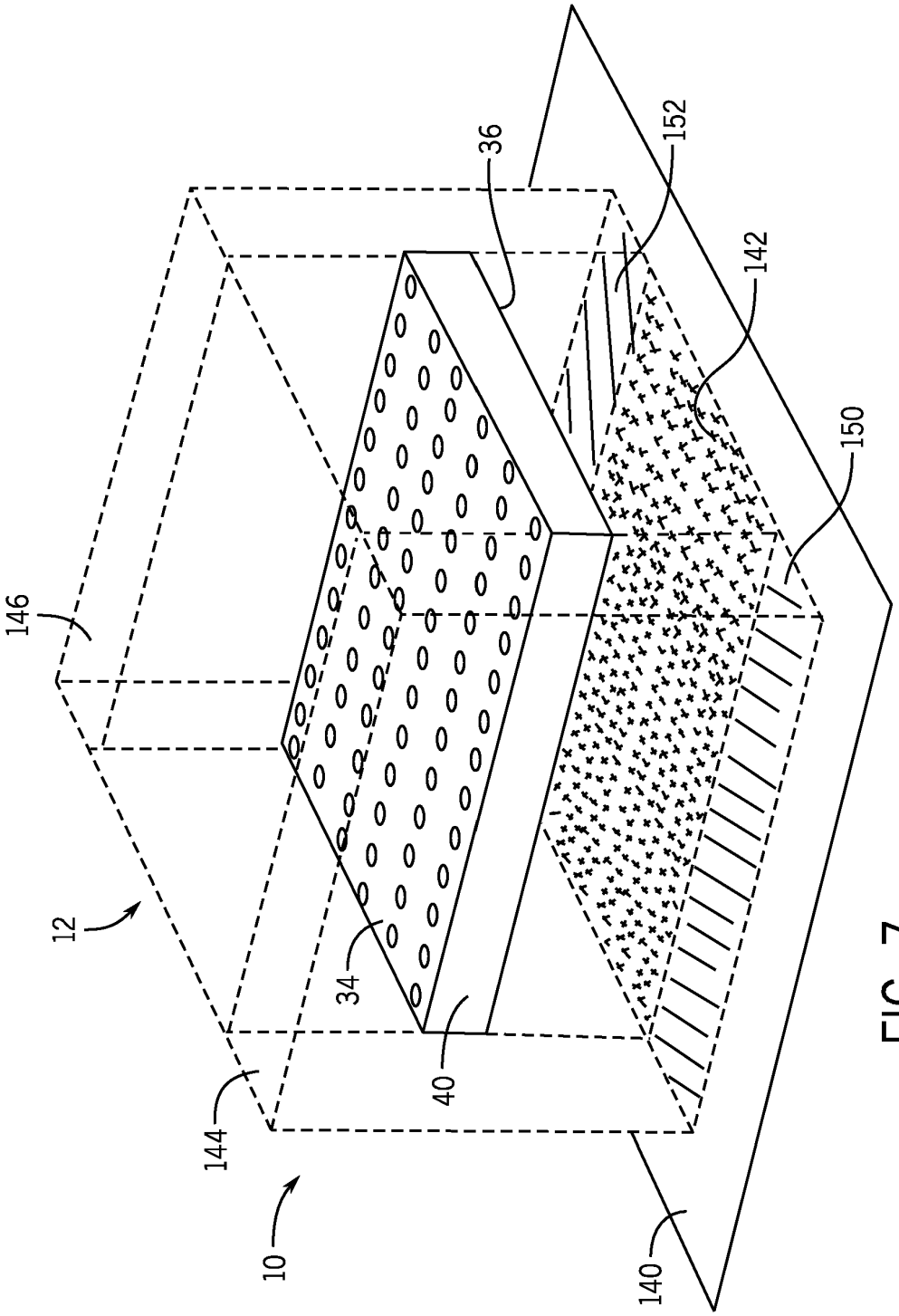

FIG. 7

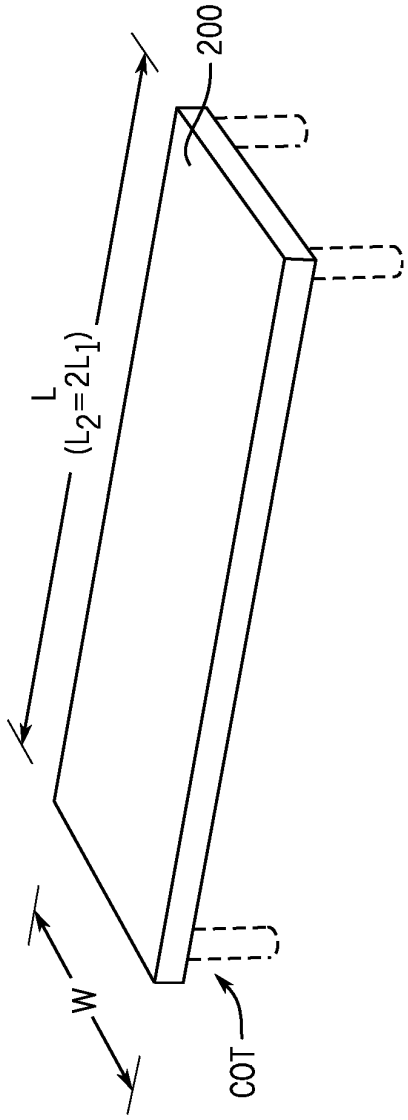

TOTAL MOUNTING SURFACE AREA (SA)	UPPER SA (LABELED 200)	SIDE-1 SA (LABELED 162) + SIDE-2 SA (LABELED 164)
CONVENTIONAL	UPRIGHT	

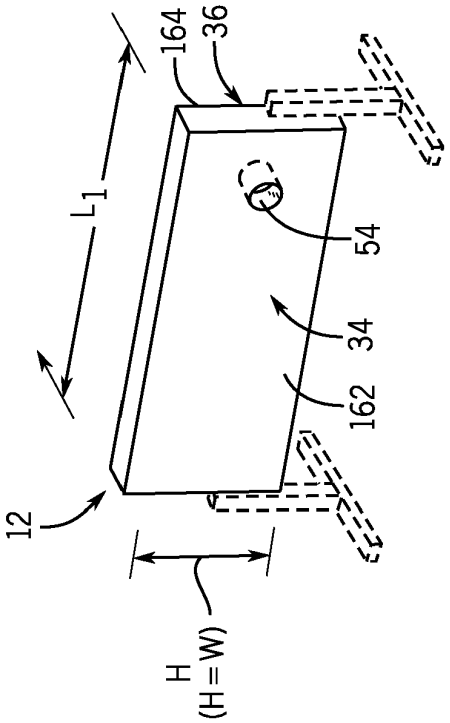

FIG. 8

VERTICAL SUPPORT ARRANGEMENT FOR AN OPTICAL SYSTEM

STATEMENT REGARDING FEDERALLY SPONSORED RESEARCH OR DEVELOPMENT

[0001] This invention was made with government support under 2314378 awarded by the National Science Foundation. The government has certain rights in the invention.

CROSS REFERENCE TO RELATED APPLICATION

[0002] -

BACKGROUND OF THE INVENTION

[0003] The present invention relates to optical systems and, in particular, to support arrangements or support devices such as optical tables for supporting optical components or devices within optical systems.

[0004] Laser-based and other optical systems used in industry or academia to conduct, for example, research experiments require precisely and accurately aligned optical devices. Numerous mounting systems or support devices have been developed to facilitate mounting optical devices in proper alignment with each other.

[0005] An example of an optical system support device is an optical table. Optical tables can support large and complicated optical systems and may provide thermal stability and isolation from vibration or other external influences. Complex optical systems may include, for example, dozens or hundreds of optical devices, entire instruments, and/or entire laser systems, which can occupy a substantial amount of space.

[0006] In order to provide the required space-occupying characteristics of large and/or complex optical systems, optical tables can have correspondingly large dimensions. Many optical tables have support surfaces with large surface areas of between twenty-four and seventy-two square feet, with typical width and length dimensions of, for example, four-feet wide and between six-feet and twelve-feet long. Some optical tables are substantially larger, with support surface areas of at least about one hundred twenty square feet, such as those with respective width and length dimensions of six-feet wide and twenty-feet long.

[0007] However, the large dimensions of optical tables can present numerous challenges while using the optical systems. These challenges can be frustrating to optical system users that have to spend long periods of time, for example, hours per day, reaching across optical tables and can be particularly frustrating to wheelchair users.

[0008] One example is that optical tables typically have fixed heights, which may not be appropriate for all users. An optical table's height is determined by fixed-height dimensions of various leg-like components, such as support posts, vibration isolators, and spacers. Changing an optical table's height typically requires substituting those leg-like components for other ones with different heights, which is often impractical.

[0009] As another example, an optical table's width dimension can make the table ergonomically challenging for many users. Many optical system users are unable to reach across an optical table's full width. Optical system users that are also wheelchair users can experience even greater difficulties reaching across an optical table's width, with large portions of the optical table being wholly inaccessible to some. Even users that are able to reach across the full width of an optical table may have to stretch or strain in order to do so, which can be uncomfortable and/or fatiguing.

[0010] Other examples of dimension-related challenges relate to the space within the optical table's use environment. An optical table can occupy a substantial amount of a lab's floorspace. This potentially presents an obstacle(s) to moving items or people through the lab.

[0011] Some efforts have been made to address various ones of these challenges. However, many of these efforts complicate other challenges or present new ones. In one example, efforts have been made to vertically mount optical breadboards to extend upwardly from optical tables' support surfaces with fixed brackets. However, an optical table that has a positionally fixed upright optical breadboard has the same footprint or occupies the same amount of floorspace within a lab as one without it. The optical table, itself, in these configurations presents an obstacle or obstruction that a user must reach across and/or lean over to access the breadboard. A positionally fixed upright optical breadboard presents a mechanical barrier that blocks access to portions of the optical table behind it and its upper portions can be at heights that are difficult for users to reach.

[0012] Furthermore, it can be difficult to mount and unmount optical devices to and from positionally fixed upright optical breadboards on top of optical tables. Since users are prevented from standing or sitting immediately next to such a breadboard extension from by the space-obstructing optical table, users must simultaneously reach across or lean over the optical table, hold the optical device against the optical breadboard, and tightening or loosening its mounting fasteners. Large or heavy optical devices may require more than one user to perform these tasks due to these challenges.

SUMMARY OF THE INVENTION

[0013] The present invention provides a support arrangement for an optical system with an optical support panel, such as an optical table or optical breadboard, provided in an upright position while facilitating substantially free accessibility to the upright panel. The optical support panel is configured to hold optical devices of the optical system in a vertical arrangement, for example, in a common vertical plane, when in the upright position. This provides full access to an entire mounting surface(s) of the optical support panel by allowing users to position themselves immediately next to the optical support panel's mounting surface.

[0014] According to one aspect of the invention, when the optical support panel is in the upright position, an unobstructed zone may be defined next to it. The unobstructed zone may be defined by a column of open space that nests against the upright optical support panel, which does not have any, for example, protruding support structures that would prevent users from standing or sitting immediately next to or against the optical support panel or the optical devices mounted to it. The optical support panel may include a pair of primary walls that are parallel to each other define planar mounting surfaces that are oriented in parallel vertical planes when the panel is in the upright position.

[0015] It is thus a feature of at least one embodiment of the invention to provide an optical support panel that can be

arranged in an upright portion with an open space next to it to facilitate access to the entire surface area of its mounting surface(s).

[0016] According to another aspect of the invention, the upright optical support panel presents a pair of oppositely facing upright mounting surfaces, each of which may include an array of mounting holes. A passage or port may extend through the entire thickness of the support panel to provide a duct-like connection between the sides or mounting surfaces, through which light may be transmitted.

[0017] It is thus a feature of at least one embodiment of the invention to allow both sides of an upright optical support panel to provide a pair of upright mounting surfaces that may collectively support optical devices of single optical system. This doubles the upright optical support panel's effective usable surface area when compared to a horizontal optical table since system components may be mounted on both sides and still interact with each other through the port(s). For example, when comparing a horizontal optical table and a double-sided-mounting upright optical support panel with the same width (height for the upright configuration) dimensions, an equivalent mounting surface area of the double-sided-mounting upright optical support panel is achieved with one-half of the length dimension as the horizontal optical table with its single-upper mounting surface.

[0018] It is thus a feature of at least one embodiment of the invention to provide substantial space savings with an upright optical support panel that may be a fraction of the length of a conventional optical table with an equivalent total mounting surface area by implementing multiple mounting surfaces that can support optical devices that may interact with each other even though they are supported by the different surfaces.

[0019] According to another aspect of the invention, the optical support panel may be mounted to frame that is supported either by an underlying floor surface or an overlying ceiling structure. The frame may include various accessory components such as vibration dampers or other isolation devices. The isolation devices may be arranged between the frame and its underlying or overlying support structure, between components or segments of the frame itself, or between the frame and the panel.

[0020] It is thus a feature of at least one embodiment of the invention to provide an optical support panel in an upright position that is isolated from various external forces or influences, which may improve operational stability.

[0021] According to another aspect of the invention, the frame facilitates movement of the optical support panel. The frame itself may be readily movable. A set of casters or other movement devices may be mounted to various supports of the frame.

[0022] It is thus a feature of at least one embodiment of the invention to facilitate moving an optical support panel within a lab space while avoiding disassembly/reassembly procedures, which may simplify rearranging a lab or temporarily storing the optical support panel.

[0023] According to another aspect of the invention, the optical support panel may be movable with respect to at least portions of the frame. The support arrangement may include a height adjuster and/or a rotation adjuster to respectively change the height(s) and rotational position(s) of the panel. The height adjuster may include a height drive that can be manually powered by the user or powered by way of a prime mover, such as an electric motor, which may move the optical support panel between minimum and maximum height positions. Similarly, the rotation adjuster may include a rotation drive that can be manually powered by the user or powered by way of a prime mover, such as an electric motor, which may move the optical support panel between the upright position and a sideways position in which its mounting surface(s) is in a substantially horizontal plane.

[0024] It is thus a feature of at least one embodiment of the invention to allow for height and/or rotational or angular adjustments of the optical support panel, which may enhance accessibility to the optical support panel by raising/lowering it or rotating it between vertical and horizontal positions to present a user's desired position and orientation of various segments of the panel for particular tasks.

[0025] According to another aspect of the invention, the height and/or rotational adjustments to the optical support arrangement can be commanded through a remote user device. The remote user device may be implemented as a smartphone or other handheld device that is configured to communicate, typically wirelessly, with a control system that controls the height drive and/or rotation drive.

[0026] It is thus a feature of at least one embodiment of the invention to provide remote controllability of the optical support panel's repositioning, which may expedite panel repositioning by allowing a user to evaluation the panel's position from different perspectives than would be permissible with inputs directly at the component(s).

[0027] According to another aspect of the invention, a rotation prevention device may be arranged within a torque transmission path between the rotation drive and the optical support panel. The rotation prevention device may be, for example, a brake, a pin, or a detent that selectively interacts with a panel support component that drives its rotation to selectively lock or unlock and correspondingly prevent or permit the panel's rotation.

[0028] It is thus a feature of at least one embodiment of the invention to selectively fix the optical support panel in a desired position, which may present and hold certain segments of the panel in a particularly accessible location for a corresponding task.

[0029] These particular objects and advantages may apply to only some embodiments falling within the claims and thus do not define the scope of the invention.

BRIEF DESCRIPTION OF THE DRAWINGS

[0030] FIG. **1** is a partially schematic isometric view of a support arrangement including various frames in accordance with an aspect of the invention;

[0031] FIG. **2** is a partially schematic isometric view of a variant of the support arrangement of FIG. **1**;

[0032] FIG. **3** is a partially schematic isometric view of a variant of the support arrangement of FIG. **1** representing a height adjustment procedure;

[0033] FIG. **4** is a partially schematic isometric view of a variant of the support arrangement of FIG. **1** representing a rotation or angular adjustment procedure;

[0034] FIG. **5** is a partially schematic isometric view of a variant of the support arrangement of FIG. **1** showing various zones associated in a use-area with the optical support panel in an upright position;

[0035] FIG. **6** is a partially schematic isometric view of a variant of the support arrangement of FIG. **1** showing various surface areas;

[0036] FIG. **7** is a is a partially schematic isometric view of a variant of the support arrangement of FIG. **1** showing various zones associated in a use-area with the optical support panel in a sideways position; and

[0037] FIG. **8** is a partially schematic isometric view providing a size comparison of an upright optical support panel and a conventional optical table with equivalent total mounting surface areas.

DETAILED DESCRIPTION OF THE PREFERRED EMBODIMENT

[0038] Referring to FIG. **1**, a support arrangement **10** includes an optical support panel **12** that is shown supporting an optical system **14**. Optical system **14** includes multiple optical devices **16** such as, for example, various light sources **18**, optics **20**, and detectors **22**. The light sources **18** may include various lasers, lamps, LEDs (light emitting diodes), SLDs (super-luminescent diodes) or systems implementing those components. Optics **20** may include mirrors, lenses, beam-splitters, windows and wedges, prisms, mirrors, or the like. Detection devices or detectors **22** may include, for example, various sensors, analysis devices, and cameras. Regardless, optical system's **14** optical devices **16** are supported, typically removably supported, by the optical support panel **12**.

[0039] Still referring to FIG. **1**, optical support panel **12** has a body defined by multiple walls that are connected to each other and present outwardly facing surfaces. These include primary or main walls **30**, **32** which are shown here presenting major surfaces or the optical support panel's largest surfaces as planar mounting surfaces **34**, **36**. The side and end walls **40**, **42** extend perpendicularly between and connect respective side and end edges of the main walls **30**, **32** while presenting corresponding side and end surfaces **44**, **46**. A gridwork or array **50** of mounting holes **52** is shown at the main wall's **30** mounting surface **34** and is typically provided at other surfaces of the optical support panel **12**, such as main wall's **32** mounting surface **36**. The mounting holes **52** may be threaded bores that receive fasteners for securing the optical device **16** to the respective mounting surface.

[0040] Still referring to FIG. **1**, the optical support panel **12** may support more than one optical system **14**. In one example, each of the main walls **30**, **32** may support an optical system **14** at the opposing sides of the optical support panel **12**. In some implementations, a singe optical system **14** has various ones of its optical devices **16** supported by different surfaces of the optical support panel **12**. For example, some of the optical system's **14** optical devices **16** may be supported by main wall's **30** mounting surface **34** while other optical devices **16** may be supported by different segments of the optical support panel **12**, such as main wall's **32** mounting surface **36** and/or the various surfaces side or end surfaces **44**, **46** (only one shown) of the side and end walls **40**, **42** (only one shown). Various passages or ports may extend into or through different segments of the optical support panel **12** to facilitate, for example, light transmission through those segments. A passage or port **54** is shown here extending through an entire thickness of the optical support panel **12**, which allows light to be transmitted through the optical support panel **12**, from an optical device(s) **16** on one side to an optical device **16** on the other side. Although optical support panel **12** is represented here with one particular optical table-type configuration, it is understood that it may instead be implemented with, for example, other relative dimensions or dimensional ratios, or may have non-table configurations such as those of optical breadboards and/or other forms that provide at least one mounting surface that is configured to support optical system **14**.

[0041] Still referring to FIG. **1**, frame **60** supports the optical support panel **12** and therefore also the optical system **14**. At least at times and as shown, frame **60** supports the optical support panel **12** in an upright position. This correspondingly arranges the main walls **30**, **32** and their mounting surfaces **34**, **36** vertically or in a generally vertical plane(s). When the optical support panel **12** is in the upright position, the optical devices **16** extend generally horizontally from their respective mounting surfaces **34**, **36**, in a cantilevered manner.

[0042] Various schematic representations of different implementations of frame **60** are shown as a set of frames above the bracket toward the top of FIG. **1**. Frame **60**A is shown with support feet **62** engaging a lower wall of the optical support panel **12**, supporting the optical support panel **12** at its ends. The support feet **62** may include, for example, vibration dampers including various damping weights and/or struts or other isolator devices **63** to dampen vibrations in the vertical and/or horizontal dimensions or otherwise reduce transmission of forces from the underlying ground or floor surface into the optical support panel **12**. It is further contemplated that such isolator device(s) **63** may be arranged at other locations within frame **60** or elsewhere within the support arrangement **10**, such as immediately between the support arrangement **10** and underlying floor surfaces or overlying ceiling structures, or between various components or segments of the frame **60** itself or otherwise between the optical support panel **12** and other components or subassemblies of the support arrangement **10**, and/or implemented as internal features or devices within the optical support panel **12** itself.

[0043] Still referring to FIG. **1**, frame **60**A is also shown with components configured for moving the optical support panel **12** to different locations within a lab-space or other use environment, represented here as casters **64** that are mounted below or to bottom surfaces of feet **62**. Frame **60**B is shown with upright tubular members or posts **66**. Lower ends **68** of posts **66** are connected to upper surfaces of feet **62** and upper ends **70** are arranged outwardly of the ends of optical support panel **12** for supporting it. At least one cross-member, shown as a lower cross-member **72**, may extend between and connect the posts **66** or feet **62** to each other, below the optical support panel **12**. Frame **60**C also engages an underlying floor surface for supporting the optical support panel **12** like frames **60**A, **60**B, but further includes an upper cross member **74** that connects the upper ends **70** of posts **66** to each other in a gantry-like overhead manner. Subframe **76** is shown within frame **60**C, captured between the uprights **66** and suspended below the upper cross member **74**, supporting the optical support panel **12**. Frame **60**D is also shown with a subframe **76** captured between the uprights **66** and suspended below the upper cross member **74**. Unlike the other frames **60**A, **60**B, **60**C, frame **60**D is shown configured for overhead mounting. Upper mounting pads **78** are shown connected to upper ends **70** of posts **66** and are configured to be attached to a ceiling structure to suspend the optical support panel **12** and frame **60**D.

[0044] Still referring to FIG. **1**, a panel position control system **80** is configured to change the position and/or

orientation of optical support panel **12** within frame **60**. Panel position control system **80** includes height adjuster **82** and rotation adjuster **84**. Height adjuster **82** is configured to selectively raise and lower to optical support panel **12**, to move into different heights between a minimum height position and a maximum height position to a desired height position. Rotation adjuster **82** is configured to move the optical support panel **12** to different angular positions, rotationally moving it about a horizontal rotational axis to a desired angular orientation.

[0045] Referring now to FIG. **2**, height adjuster **82** and rotation adjuster **84** of position control system **80** respectively include height drive **86** and rotation drive **88**. Each of the height and rotation drives **86**, **88** may be configured for manually moving the optical support panel **12** by way of a manual input device. A manual input device is represented here as knob **92** that can be rotated to transmit torque through, for example, a geartrain that adjusts the height or angular position of the optical support panel **12**. A knob **92** at height adjuster **82** may operate a rack-and-pinion type geartrain to extend or retract telescoping segments of post **66**, shown as upper post segment **94** telescopically mounted within a longitudinal opening of a lower post segment **96**.

[0046] Still referring to FIG. **2**, the knob **92** at rotation adjuster **84** may operate a pinion or bevel gear type geartrain to force rotation of optical support panel **12**. Optical support panel **12** is shown here rotationally mounted from its opposite ends to the upper post segments **94** by a pair of panel mounts **98**. Each panel mount **98** includes plate **100** that is connected to and extends perpendicularly with respect to the upper end of upper post segment **94**. Bearings **102** are shown as a pair of bearing blocks mounted to each plate **100**. Support shaft **104** extends through and is rotationally supported by the bearings **102**. An inner end of support shaft **104** is connected to bracket **106**, which provides the connection interface to optical support panel **12**. Bracket **106** is shown here with a generally C-shaped profile when viewed from a top plan view, to engage both of the opposing main walls **30**, **32** as well as the end wall(s) **42**.

[0047] Still referring to FIG. **2**, the angular position of optical support panel **12** may be selectively fixed or held or its rotation may be stopped by way of a fixing or holding device, represented as rotation prevention device **109**. Rotation prevention device **109** may be implemented as or include, for example, a pin, detent, or brake that selectively engages a component that rotates in unison with optical support panel **12**, such as support shaft **104**.

[0048] Still referring to FIG. **2**, in addition to and/or instead of manual adjustability, the height drive **86** and/or rotation drive **88** of position control system **80** may include a prime mover(s) in communication with control system **90** that is configured for controlling the prime mover(s) to facilitate the position or orientation adjustments. Control system **110** may include, for example, a computer which may be an industrial computer or, for example, a PLC (programmable logic controller), along with corresponding software and suitable memory for storing such software and hardware including interconnecting conductors for power and signal transmission between components of the position control system **80**. The computer(s) of control system **110** executes various stored programs while receiving inputs from and sending commands to various components of position control system **80** to provide controls that correspond to (re) positioning the optical support panel **12**. Height drive **86** may be implemented as a linear actuator **112**, shown here as a pair of linear actuators **112** with one associated with each post **66**. Each linear actuator **112** may have an electric motor that can be selectively energized through control system **110** to adjust the height or vertical position of optical support panel **12**. Rotation drive **88** may be implemented as a motor drive **114**, shown here as a single motor drive **114** may be implemented as, for example, a servo drive or other drive system that incorporates an electric motor that can be selectively energized through control system **110** to adjust the angular position or orientation of optical support panel **12**.

[0049] Referring now generally to FIGS. **3** and **4**, control system **110** may be configured to facilitate remote adjustments of the height or vertical position and angular or rotational position of optical support panel **12**. A user device **120**, shown here as a handheld device such as a smart phone, defines an HMI (human machine interface) that remotely and typically wirelessly communicates with cooperating components of control system **110** to receive user inputs or instructions and transmit them to control system **110**. The wireless communications may be done by way of, for example, Wi-Fi or Bluetooth® communication protocols. User device **120** typically includes a touchscreen **122** that may present a GUI (graphical user interface) **124**. Control system **110** receives the instructions from user device **120** and issues corresponding commands to position control system **80** effectuate corresponding movement of optical support panel **12**.

[0050] Referring now to FIG. **3**, a height adjustment procedure of optical support panel **12** is shown. GUI **124** is shown presenting an up-button **126** and a down-button **128** on touchscreen **122**. A user may press up-button **126** to provide a height-increase instruction to control system **110**. Control system **110** receives the height-increase instruction and delivers a corresponding command to energize the motor(s) of linear actuator(s) **112** and move the optical support panel **12** upwardly a corresponding amount. A user presses down-button **128** to drive the optical support panel **12** in the opposite direction and lower it by the control system **110** energizing the motor to rotate it in the opposite direction. A maximum height is represented by the position of optical support panel **12** in solid-outline and a minimum height is represented by the position of the optical support panel **12** in dashed-outline.

[0051] Referring now to FIG. **4**, an angular or rotational adjustment procedure of optical support panel **12** is shown. GUI **124** is shown presenting a counterclockwise-button **130**, a clockwise-button **132**, and a hold or brake-button **134**. A user may press the counterclockwise-button **130** to provide a corresponding counterclockwise rotation instruction to control system **110**. Control system **110** receives the counterclockwise rotation instruction and delivers a corresponding command to energize the motor(s) of motor drive **114** to rotate its output shaft in a direction that corresponds to a counterclockwise rotation of optical support panel **12** about a horizontal axis of rotation. A user presses clockwise button **132** to drive the optical support panel **12** in a clockwise direction by the control system **110** energizing the motor to rotate the motor drive's **114** output shaft in a direction that corresponds to a clockwise rotation of optical support panel **12** about the horizontal axis of rotation. This allows a user to rotate the optical support panel **12** between upright and sideways positions. The vertical or upright

position of optical support panel **12** is represented by its position shown in dashed-outline. The sideways or horizontal position of optical support panel **12** is represented by its position shown in solid-outline. When a user presses brake button **134** to lock the optical support panel **12** in its angular position, control system **110** issues a command to lock the optical support panel. This may include energizing an actuator within rotation prevention device **109** to engage shaft **104** with a braking element or the like to prevent its rotation.

[0052] Referring again generally to FIGS. **3** and **4**, it is understood that GUI **124** may present other virtual buttons to control the various movements of optical support panel **12** or those shown can be programmed to provide different commands. For example, whereas brake switch **134** may function similar to a two-position switch that toggles between on and off states with alternative presses, the height and angular position controlling switches may function as momentary switches that that only drive movement of the optical support panel **12** while the user is pressing the respective button. The various virtual buttons may also provide single-touch driving of optical support panel **12** to defined positions. This could include a single-touch of a button to drive the optical support panel **12** from its upright position to its sideways position and vice versa. As a height adjustment example, a single touch of a virtual button could drive the optical support panel **12** from a maximum height position to a minimum height position and vice versa. Predefined or redefinable incremental movements can also be achieved through single-touch engagements of the GUI's **124** virtual buttons. A single-touch of a rotation button can provide rotations of 10-degree movement increments or some other discrete amount(s) of rotational movement. Likewise, a single-touch of a raise or lower button can correspondingly raise or lower the optical support panel **12** in a one-inch increments or some other discrete amount(s) of height adjustment.

[0053] Referring now to FIGS. **5** and **6**, regardless of the particular configuration of the panel position control system's **80** user interface, the panel position control system is configured to allow users to adjust the optical support panel's **12** position and orientation to enhance accessibility to its different segments. This may include moving the optical support panel **12** to its upright position, which provides unobstructed access to the mounting surfaces **34**, **36** and allows users to stand or sit immediately against the mounting surfaces **34**, **36** without having to reach horizontally across the panel. Typically, when the optical support panel **12** is in the upright position, the optical devices **16** (FIG. **1**) extend further from respective mounting surface **34**, **36** further than any other structure of the support arrangement **10** that is directly in from of the mounting surface **34**, **36**, providing free open access to the mounting surfaces, in their entireties.

[0054] Referring now to FIG. **5**, when in the upright position, the optical support panel **12** projects a panel footprint area on an underlying floor surface **140**, shown as panel footprint **142**. Panel footprint **142** has a profile or perimeter shape and dimensions that correspond to those of side wall **40** when view from a top plan view of the optical support panel **12** in its upright position. Accordingly, panel footprint **142** has a generally rectangular perimeter shape with a width dimension that is substantially less than its length dimension. The panel footprint's **142** length dimension is typically at least four-times greater than its width dimension and may be, for example, at least ten-times greater than its width dimension.

[0055] Still referring to FIG. **5**, a pair of unobstructed zones **144**, **146** are defined at opposite sides of the optical support panel **12** and generally provide spaces in which users may freely stand or sit while accessing the mounting surfaces **34**, **36**. Unobstructed zones **144**, **146** are defined by box-like or columnar open spaces juxtaposed to or immediately adjacent mounting surfaces **34**, **36**, respectively. Inner boundaries of the unobstructed zones **144**, **146** are defined by the respective outwardly facing mounting surfaces **34**, **36**. Height dimensions of the unobstructed zones **144**, **146** are shown corresponding to a distance between an upper edge of optical support panel **12** and the floor surface **140**. Length dimensions of the unobstructed zones **144**, **146** are shown corresponding to the length dimension of optical support panel **12**. Width dimensions of unobstructed zones **144**, **146** typically correspond to width dimension of feet **62** (FIG. **2**) or how far the frame **60** (FIG. **2**) extends perpendicularly away from the mounting surfaces **34**, **36** for within arms-length of a user when in the panel's upright position. The lower boundaries of the unobstructed zones **144**, **146** are provided by floor surface **140** and define corresponding unobstructed floor spaces **150**, **152**.

[0056] Referring now to FIG. **6**, when optical support panel **12** is in its upright position, it occupies a relatively small amount of floor space while presents relatively large amounts of mounting surface area(s) for attaching optical components **16** (FIG. **1**) to the optical support panel **12**. Panel footprint **142** defines a footprint surface area (FPSA) **160**. The first and second mounting surfaces **34**, **36** respectively define a first mounting surface area (MSA1) **162** and a second mounting surface area (MSA2) **162**. Each of the mounting surface areas **162**, **164** is larger than the footprint surface area **160**. Typically, each mounting surface area **162**, **164** is multiple times greater than the footprint surface area **160**, for example, at least about three-times greater, at least about five-times greater, or at least about ten-times greater than the footprint surface area **160**. With such large vertically arranged mounting surfaces **34**, **36**, compared to the floor space occupied by downward projections of the system components, a corresponding fraction of an amount of floorspace can be used for providing optical systems **14** (FIG. **1**) that would otherwise be required.

[0057] Referring now to FIG. **7**, with background reference to FIGS. **5** and **6**, the magnitude of the panel footprint surface area **160** (FIG. **6**) is variable as a function of the optical support panel's **12** orientation or angular position. When in the upright position, the panel footprint surface area **160** (FIG. **6**) defines a minimum value (FIG. **5**) and a maximum value is defined with the optical support panel **12** is in its sideways position (FIG. **7**). Accordingly, the greatest ratio of exposed usable surface area of mounting surfaces **34**, **36** versus occupied floorspace or footprint surface area **160** (FIG. **6**) is achieved when the optical support panel **12** is in the upright position. Referring to FIG. **6**, such a ratio may correspond to a sum of the areas of the first (MSA1) and second (MSA2) mounting areas **162**, **164** versus the area of the footprint surface area (FPSA) **160**. In an example in which optical support panel **12** with a pair of opposing support surfaces in its sideways position defines respective width, length, and thickness dimensions of four feet, ten feet, and six inches, such a ratio is 80 square feet: 5.5 square feet.

[0058] During use, a user may adjust the height or angular position of optical support panel **12** to enhance accessibility as well as provide different positions or orientations for different tasks. For example, during a device mounting procedure, when mounting relatively lightweight optical devices **16**, a user may move the panel to its upright position to access the mounting surface(s) **34**, **36** from the unobstructed zone(s) **144**, **146**. If a particularly large or heavy optical device **16** needs to be mounted, especially toward an outer edge of the panel **12**, the user may rotate the panel **12** to its sideways position to avoid manually supporting the weight of such a heavy device **16** while mounting. Then, the user may move panel **12** back to its upright position to perform a use-session of the optical system **14**. Furthermore, multiple support arrangements **10** can be implemented at a single location and, when storage or minimizing floorspace is desired for storage or compact use, the panels **12** may all be moved to their upright positions and the frames **60** nested against or otherwise by positioned near each other for storage or performing the use-session in a compact manner.

[0059] Referring now to FIG. **8**, this schematic representation shows a substantial size reduction of optical support panel **12** compared to a conventional optical table (COT) to provide an equivalent effective mounting surface area. As is typical, conventional optical table COT has a total mounting surface area that is defined by its upper surface **200**. In contrast, the illustrated upright optical support panel **12** has a total mounting surface area that is the sum of its surface areas of both of its sides, such as mounting surface areas **162**, **164** that are functionally joined by port(s) **54** that allows optical devices **16** (FIG. **1**) mounted to both mounting surface areas **162**, **164** of surfaces **34**, **26** to interact with each other. As shown, if the remaining dimensions that influence mounting surface areas are the same, then the double-sided-mounting upright optical support panel **12** can provide an equivalent total mounting surface area with a length dimension that is one-half of that of conventional optical table COT. For example, upright optical support panel **12** is shown with a height dimension (H) that is the same as conventional optical table COT's width dimension (W). Upright optical support panel **12** is shown with length dimension (L1) that is one-half of the length dimension (L2) of conventional optical table COT, yet both the upright optical support table **12** and conventional optical table have the same total mounting surface area for mounting optical devices **16** (FIG. **1**).

[0060] It is understood that although interactions of optical component **16** (FIG. **1**) mounted to different mounting surfaces **34**, **36** are primarily discussed as occurring through port **54**, port **54** may instead be configured as, for example, a cutout or recess that extends in an edge(s) or side and/or end wall(s) **40**, **42** (FIG. **1**). Various different surface-mounted component interactions may also be provided by way of optical devices **16** (FIG. **1**), such as fiber-optic devices and/or mirrors or the like, that may extend beyond a periphery of the optical support table **12** to direct the light around an edge or side and/or end wall(s) **40**, **42** (FIG. **1**) in a manner that allows the optical devices **16** on both mounting surfaces **34**, **36** to interact with each other.

[0061] Certain terminology is used herein for purposes of reference only, and thus is not intended to be limiting. For example, terms such as "upper", "lower", "above", and "below" refer to directions in the drawings to which reference is made. Terms such as "front", "back", "rear", "bottom" and "side", describe the orientation of portions of the component within a consistent but arbitrary frame of reference which is made clear by reference to the text and the associated drawings describing the component under discussion. Such terminology may include the words specifically mentioned above, derivatives thereof, and words of similar import. Similarly, the terms "first", "second" and other such numerical terms referring to structures do not imply a sequence or order unless clearly indicated by the context.

[0062] When introducing elements or features of the present disclosure and the exemplary embodiments, the articles "a", "an", "the" and "said" are intended to mean that there are one or more of such elements or features. The terms "comprising", "including" and "having" are intended to be inclusive and mean that there may be additional elements or features other than those specifically noted. It is further to be understood that the method steps, processes, and operations described herein are not to be construed as necessarily requiring their performance in the particular order discussed or illustrated, unless specifically identified as an order of performance. It is also to be understood that additional or alternative steps may be employed.

[0063] It is specifically intended that the present invention not be limited to the embodiments and illustrations contained herein and the claims should be understood to include modified forms of those embodiments including portions of the embodiments and combinations of elements of different embodiments as come within the scope of the following claims. All of the publications described herein, including patents and non-patent publications, are hereby incorporated herein by reference in their entireties.

[0064] To aid the Patent Office and any readers of any patent issued on this application in interpreting the claims appended hereto, applicants wish to note that they do not intend any of the appended claims or claim elements to invoke 35 U.S.C. 112 (f) unless the words "means for" or "step for" are explicitly used in the particular claim.

What we claim is:

1. A support arrangement for an optical system comprising:

an optical support panel arranged in an upright position, wherein:

the optical support panel includes a planar mounting surface;

the planar mounting surface is oriented in a generally vertical plane when the optical support panel is in the upright position; and

the mounting surface is configured to removably support at least one optical device of an optical system to extend generally horizontally outwardly from the mounting surface when the optical support panel is in the upright position.

2. The support arrangement of claim **1**, wherein:

an unobstructed zone is defined by a generally columnar open space that is laterally adjacent the mounting surface and permits free access to the mounting surface of the optical support panel by a user;

the unobstructed zone has a height dimension that corresponds to a distance between an upper edge of the optical support panel and an underlying floor surface; and

the unobstructed zone has an inner boundary that extends vertically along the mounting surface.

3. The support arrangement of claim **2**, wherein when the optical support panel is in the upright position:

a panel footprint area is defined by a surface area on the floor surface that corresponds to a vertical projection of the optical support panel when viewed from a top plan view; and

the panel footprint area is smaller than a surface area of the mounting surface.

4. The support arrangement of claim **3**, wherein the panel footprint has a generally rectangular perimeter shape with a width dimension and a length dimension that is at least four-times greater than the width dimension.

5. The support arrangement of claim **3**, wherein:

the mounting surface is a first mounting surface and the optical support panel includes a second mounting surface that is parallel to the first mounting surface at an opposite side of the optical support panel;

the unobstructed zone defines a first unobstructed zone and the open space defines a first open space;

a second unobstructed zone is defined by a second generally columnar open space that is laterally adjacent the second mounting surface and permits free access to the second mounting surface of the optical support panel by a user;

the second unobstructed zone has a height dimension that corresponds to a distance between the upper edge of the optical support panel and the underlying floor surface; and

the second unobstructed zone has an inner boundary that extends vertically along the second mounting surface.

6. The support arrangement of claim **5**, wherein:

a first unobstructed floorspace is defined by a surface area on the floor surface at a lower boundary of the first unobstructed zone;

a second unobstructed floorspace is defined by a surface area on the floor surface at a lower boundary of the second unobstructed zone; and

the first and second unobstructed floorspaces are separated from each other by the panel footprint area.

7. The support arrangement of claim **1**, wherein the optical support panel defines:

a sideways position with the mounting surface of the optical support panel oriented in a generally horizontal plane.

8. The support arrangement of claim **7**, further comprising:

a frame;

a rotation drive that is:

mounted between the frame and the optical support panel; and

configured to selectively rotate the optical support panel between the upright and sideways positions.

9. The support arrangement of claim **8**, wherein the rotation drive includes an electric motor that can be energized to rotate the optical support panel between the upright and sideways positions.

10. The support arrangement of claim **9**, further comprising a rotation prevention device that defines a locked state and an unlocked state, and wherein:

when in the locked state, the rotation prevention device prevents rotation of the optical support panel; and

when in the unlocked state, the rotation prevention device permits rotation of the optical support panel.

11. The support arrangement of claim **10**, further comprising a panel mount connected for movement in unison with the optical support panel and wherein:

when in the locked state, the rotation prevention device engages the panel mount; and

when in the unlocked state, the rotation prevention device disengages the panel mount.

12. The support arrangement of claim **11**, wherein:

the panel mount includes a support shaft that rotates in unison with the optical support panel when moving between the upright and sideways positions;

the rotation prevention device includes a brake;

the brake engages the support shaft when the rotation prevention device is in the locked state; and

the brake disengages the support shaft when the rotation prevention device is in the unlocked state.

13. The support arrangement of claim **1**, further comprising:

a frame;

a height drive that is:

mounted between the frame and the optical support panel; and

configured to selectively move the optical support panel between a minimum height position and a maximum height position.

14. The support arrangement of claim **13**, wherein the height drive includes a linear actuator that can be energized to drive vertical movement of the optical support panel.

15. The support arrangement of claim **1**, wherein the optical support panel is defined by at least one of an optical table and an optical breadboard.

16. The support arrangement of claim **1**, further comprising a frame and wherein the optical support panel is mounted to the frame for support from below by a floor structure.

17. The support arrangement of claim **1**, further comprising a frame and wherein the optical support panel is mounted to the frame for support from above by a ceiling structure.

18. The support arrangement of claim **1**, wherein:

the planar mounting surface defines a first planar mounting surface at a first side of the optical support panel that faces a first direction;

a second planar mounting surface is defined at a second side of the optical support panel that faces a second direction that is opposite the first direction; and

a port extends through the optical support panel for facilitating transmission of light from a first optical device supported on the first support surface to a second optical device supported on the second support surface.

19. A method of supporting an optical system, the method comprising:

mounting an optical support panel to a frame, wherein the optical support panel includes a mounting surface configured to support at least one optical device of an optical system;

moving the optical support panel within the frame to a sideways position in which the mounting surface is in a generally horizontal plane;

moving the optical support panel within the frame to an upright position in which the mounting surface is in a generally vertical plane.

* * * * *